L-964D
61 HP at 2600 RPM

- **Quiet, low rpm operation.**
- **Total one side service.**
- **Hydraulic power.**
- **Compact and light weight.**
- **Low odor combustion design.**

Built by Alaska Diesel Electric, Lugger diesels are known as smooth, quiet and cast-iron tough. Now ADE brings you the L-964D, based on a block from Toyota, a leader in diesel technology and quality control.

For comfort afloat the L-964D has a max RPM of 2600 instead of the 3000 to 4500 of the competition. Plus it features the latest in noise and vibration abatement, from the isolated valve cover to the sandwich oil pan. Toyota even designed a special high efficiency combustion chamber just to reduce exhaust odor.

The freshwater cooling system is oversized for thorough heat dissipation in tropical waters. It's cast iron, cupro-nickle and stainless steel to outlive engines with aluminum manifolds.

Your Lugger can do more than just push your boat. An optional, gear driven hydraulic pump can power bow thrusters, roller reefing and anchor winches. The pump needs no belts and doesn't increase the engine's size.

Need a large DC power source? Order a high output battery charging alternator. Up to 130 amps!

To all this add: total one side service access, a plug-in control panel, a safety alarm system, polyurethane paint and a self venting fuel system. You now have more than a great marine engine. You have the peace of mind that comes with knowing your boat has the best power possible. It has a Lugger.

Port (non-service) Side.

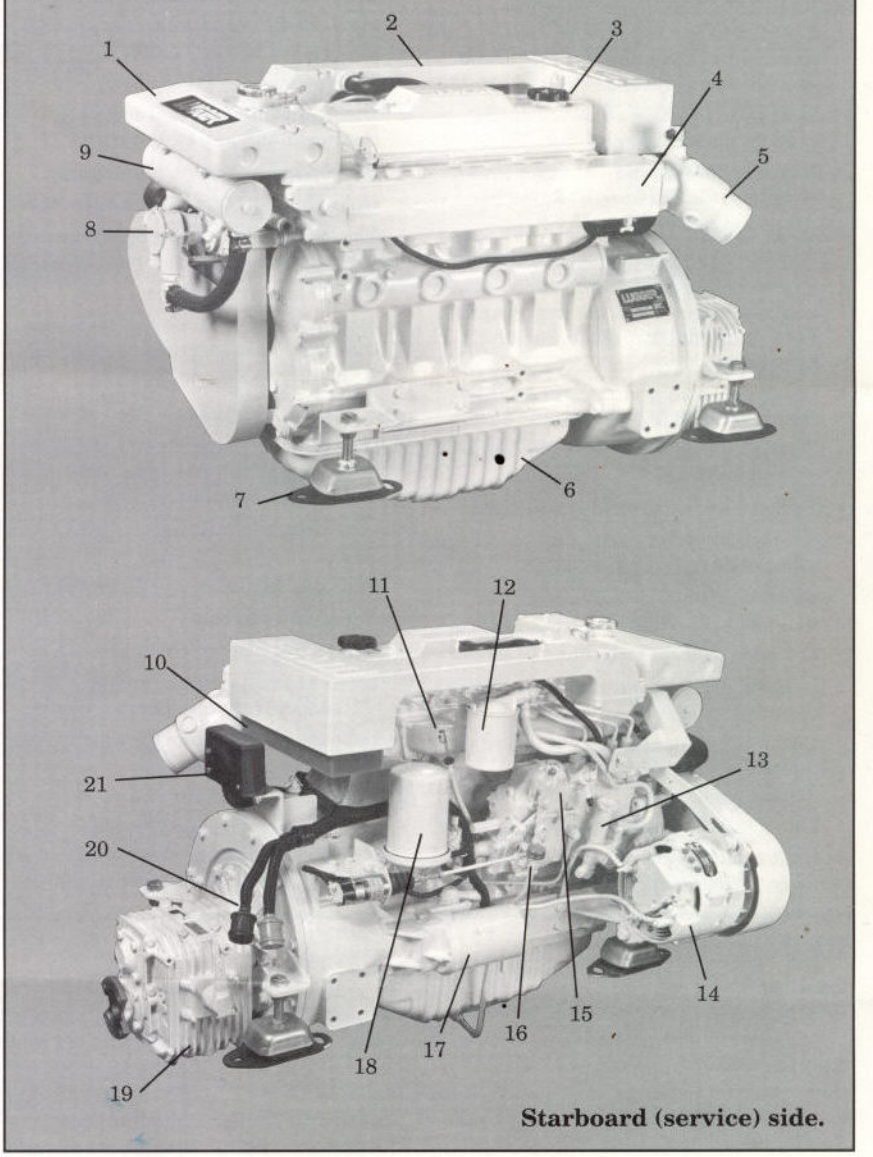

Starboard (service) side.

Specifications

Model number	L-964D
Cylinders	4 inline
Displacement	180 cid (3.0 ltr)
Operating cycle	4
Bore	3.7 in (96mm)
Stroke	4.0 in (102mm)
Aspiration	Natural
Approximate weight without gear:	
Keel cooled	558 lbs (254 kg)
Heat exchanged	576 lbs (262 kg)

1. Large capacity, low profile, expansion tank with brass fill neck.
2. Cast intake manifold.
3. Easy access lube oil fill.
2. Cast iron, freshwater cooled exhaust manifold.
5. Cast-iron, wet exhaust elbow shown. Dry elbow optional.
6. Sandwich oil pan reduces noise.
7. Vibration mounts optional.
8. Jabsco-type raw water pump.
9. Cupro-nickle heat exchanger with removable ends for easy cleaning.
10. Cleanable, air intake filter/silencer.
11. Oil level dipstick.
12. Spin on fuel filter element.
13. Fuel system primer pump.
14. Shown with optional 130 amp battery charging alternator. 40 amp std.
15. Bosch-type, inline, injection pump.
16. Lube oil drain system.
17. Ring gear starter motor.
18. Spin-on lube oil filter with bypass.
19. Your choice of marine gears and reduction ratios. Hurth 250 shown.
20. Water resistant control panel plug-in.
21. DC relays and circuit breaker are covered for moisture protection.

LUGGER®

Features and Standard Equipment.

Engine Block

- Four cycle, four cylinder, inline, liquid cooled, naturally aspirated, overhead valve, marine diesel based on a Toyota industrial block.
- Special combustion chamber design reduces diesel exhaust odor.
- Replaceable cylinder liners for lower rebuild costs and longer engine life.
- Block ribbing adds strength and reduces weight, noise and vibration.
- Crankshaft is forged carbon steel. Much stronger than cast iron cranks. Eight point balancing for smooth operation.
- Helical cut and ground, carbon steel timing and PTO gears reduce noise.
- Cross flow head and helical intake ports for efficient breathing.
- Replaceable valve guides and seats.
- Sandwich construction of oil pan reduces internal engine noise.

Cooling System

- Freshwater cooling in heat exchanger or keel cooled configuraion.
- Large capacity, expansion tank with easy water fill inlet.
- Cast iron exhaust manifold is liquid cooled for safety and long life. No hot, dry exhaust risers.
- Zinc anode electrolysis protection.
- Heat exchanger cooling includes: Easy to clean cupro nickel, tube-type heat exchanger. Jabsco-type raw water pump of bronze and stainless steel. Pump mounted on the front of the engine for easy access.

Fuel System

- Direct injection for fuel economy, clean exhaust and fast starting.
- Bosch-type in-line injection pump.
- Hole type injectors. Replaceable tips.
- Mechanical fuel lift pump with hand primer. No electric pump to fail.
- Large spin-on fuel filter.
- Stop solenoid controls fuel rack, not throttle. For more positive stopping.
- Fuel system is self venting.

Intake and Exhaust

- Cleanable dry type air cleaner in cast intake manifold. Silences intake and valve noise. No plastic parts.
- Cast iron, wet exhaust elbow for safety.
- Mufflers, dry exhaust elbows optional.

Lubrication System

- Spin-on oil filter with bypass.
- Large capacity, center well oil pan for off level operation in heeling vessels.
- Lube oil drain system for quick, clean oil changes.

DC Electrical System

- 12 volt system includes starter motor and 40 amp battery charging alternator with integrated circuit regulator.
- Instrument panel includes VDO tachometer, hour meter, stop button and key switch. Engine is protected by alarm horn and lights for low oil pressure, high water temperature and high exhaust temperature.
- Engine and panel are prewired and connected by a 20 foot wiring harness with water resistant plugs.

Special Equipment

- Closed circuit crankcase vent recycles oil vapors for a cleaner engine room.
- Operator's and parts manuals.
- White polyurethane paint for a sparkling long-life finish.
- Belt guard.

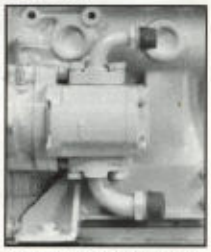

PTO Versatility

- 28 hp, SAE A, live PTO pump mount std. Opt. hydraulic pump rated 32 gpm/1500 psi at engine speed of 2000 rpm to power roller reefing, anchor winches and most 10-12 inch bow thrusters.

Optional Equipment:

- See your dealer for L964 optional equipment including : Deluxe instrument panel, mounts, front pulleys, high output alternators, hydraulic pump, exhaust elbows, mufflers and more.

Installation Data

Cooling (General)

Freshwater circulating flow at 2600 rpm.	29 gpm (110 lpm)
Heat rejection to jacket water at 2600 rpm	1641 BTU-min.

Cooling (Heat Exchanger)

Raw-water intake	1 in. NPT (25 mm)
Raw-water discharge diameter	1 in. NPT (25 mm)
Raw-water pump flow at 2600 RPM	16 gpm (60 lpm)
Raw-water pump maximum suction head	39 in (1 m)
Maximum raw-water temperature at inlet	86° F (30° C)
Freshwater system capacity	3.5 gal (12 ltr)

Cooling (Keel Cooled)

Water hose inside diameter	1-1/2 in (38 mm)
Head diameter	1-1/4 in
Turbo tube length *	12 ft
One inch plain round tube length *	20 ft
Skin cooler aluminum *	10 sq ft (1 m^2)
Skin cooler steel *	30 sq ft (2.8 m^2)

Electrical

Minimum battery capacity	200 amp hours / 640 cca
Battery cable size	1/0 up to 10 ft run
Standard instrument harness length	20 ft (6 m)

Air

Engine air consumption at 2600 RPM	104 cfm (2.9 m^3 /min)
Minimum engine room vent area	30 sq in (193 cm^2)
Exhaust gas flow at 2600 RPM	330 cfm (9.3m^3/min)
Exhaust gas temperature at 2600 RPM	1200° F (650° C)
Maximum exhaust back pressure	48 in (122 cm) H_2O
Suggested dry exhaust I.D.	2-1/2 in (63 mm)
Suggested wet exhaust I.D.	3 in. (75 mm)

Fuel and Oil

Minimum fuel suction line	3/8 in (10 mm)
Minimum fuel return line	3/8 in (10 mm)
Maximum fuel pump head	39 in (1 m)
Crankcase oil capacity	9.6 US qts (9 ltr)

Gear, PTO, Engine Angle

Engine rotation (facing flywheel)	Counter-clockwise
Flywheel housing size	SAE 4
Pump Mount PTO size (optional)	SAE A
Max. intermittent engine operating angle, front down	10°
Max. intermittent engine operating angle, rear down	30°

* Based on 70° F seawater temperature and minimum boat speed of 8 knots at full speed. Return water on keel cooling 70° to 130° F.

Performance Data

Duty Rating	High Output	Medium Duty	Continuous Duty
Rated Output	61 hp (46 KW) at 2600 rpm	54 hp (40 KW) at 2400 rpm	47 hp (35 KW) at 2000 rpm
Shaft Output	59 hp (45 KW) at 2600 rpm	52 hp (39 KW) at 2400 rpm	45 hp (34 KW) at 2000 rpm
Maximum Torque	131ft lbs at 1800 rpm	125 ft lbs at 1800 rpm	125 ft lbs at 1800 rpm
Fuel Consumption Gallons/hour	0.86 at 1700 rpm 1.43 at 2000 rpm 2.23 at 2300 rpm 3.36 at 2600 rpm	0.67 at 1500 rpm 1.15 at 1800 rpm 1.88 at 2100 rpm 2.98 at 2400 rpm	0.83 at 1400 rpm 1.23 at 1600 rpm 1.74 at 1800 rpm 2.42 at 2000 rpm

High Output

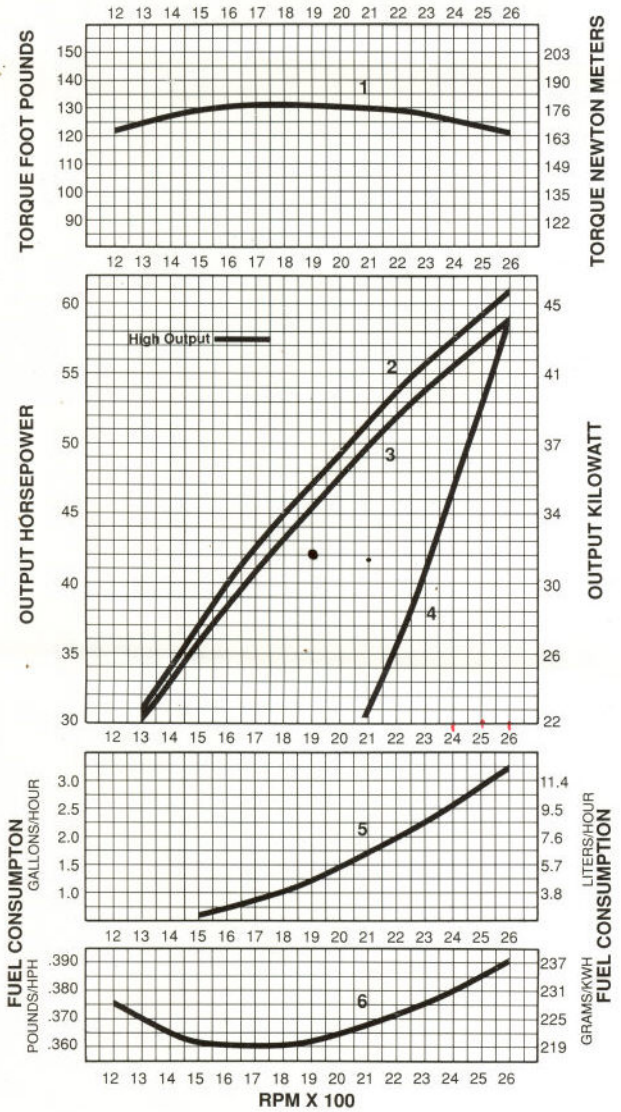

Medium & Continuous Duty

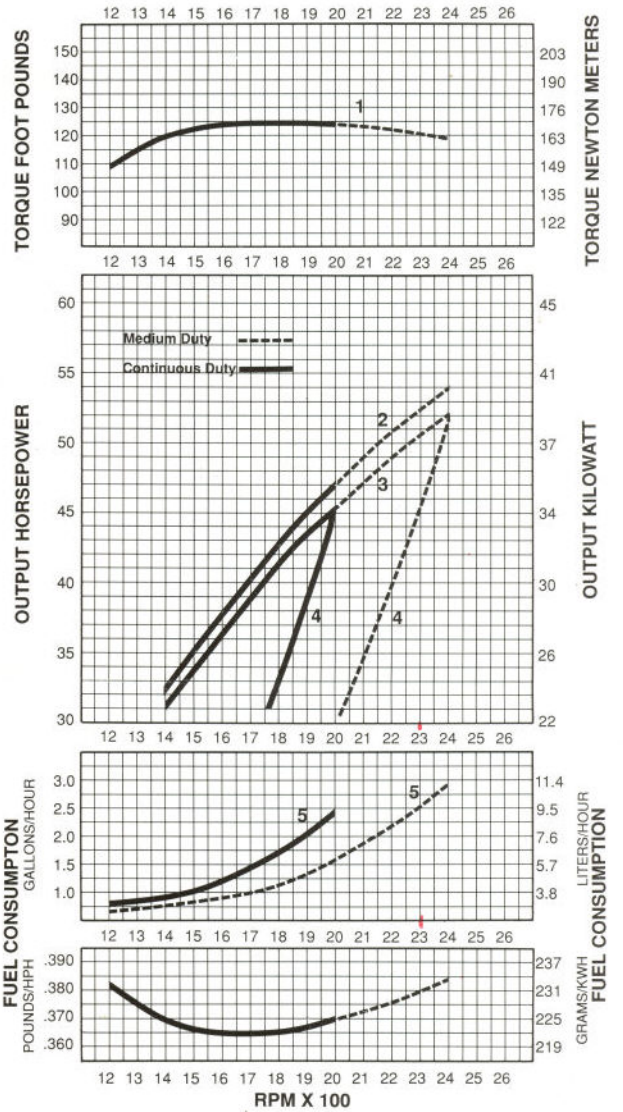

Notes: 1. Ratings based on SAE J-1349 standards.
2. Fuel consumption rates are U.S. gallons per hour based on theoretical prop shaft horsepower draw. Your fuel consumption will vary higher or lower depending on your vessel and operating conditions.
3. Maximum cruise rpm for High Output and Medium Duty ratings is 200 rpm below highest attainable rpm, or 2400 rpm, whichever is lower.

Curves: 1. Torque at flywheel. 2. Flywheel power. 3. Prop shaft power. 4. Theoretical prop power draw (3.0 exponent). 5. Fuel use based on prop power draw

Dimensional Data (3/4"=1')

Dimensions given in mm and (inches). All dimensions are given from datum lines marked with a dash inside a circle. Example: Water fill is 465 mm (18.3 inches) from the horizontal crankshaft center datum line.

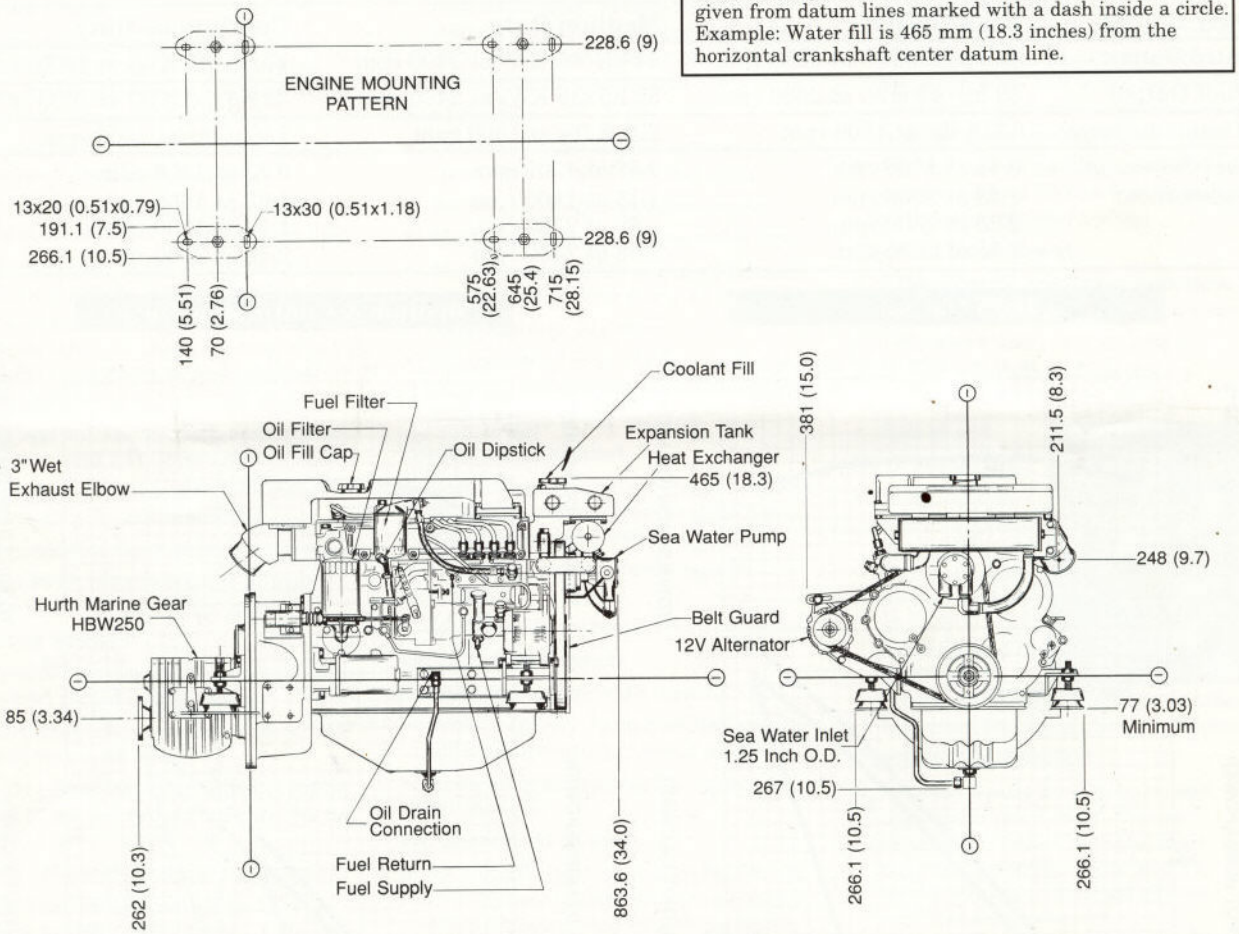

Propeller Sizing and Marine Gears

1. Use this chart to find the **approximate** propeller size for your vessel. See a dealer for specific recommendations.
2. In the left hand column, find the boat speed your architect or boatbuilder expects from an engine of this size.
3. Read across for gear ratio. Read down for propeller size, prop RPM, and stainless steel prop shaft recommendation.

Speed	Gear Ratios and 3 bladed Propellers				
(knots)	1:1	1.5:1	2:1	2.5:1	3:1
8 - 10	-	-	-	-	-
10 - 13	-	-	-	-	24 x 22
12 - 14	-	-	-	22 x 20	-
13 - 15	-	-	19 x 18	-	-
14 - 17	-	16 x 15	-	-	-
15 - 18	13 x 12	-	-	-	-
Prop RPM	2600	1733	1300	1040	866
Shaft (in)	1	1 1/4	1 1/2	1 1/2	1 3/4

Gear	Model	Ratios	Applications
Hurth	HBW250	1.54:1, 1.88:1, 1.74:1	Pleasure & commercial

Lugger diesels and Northern Lights generators are manfuactured by
Alaska Diesel Electric, Inc.
4420 14th Ave. N.W., Box 70543
Seattle, WA 98107 U.S.A.
Telephone: (206) 789-3880
Telex 32-0145 Fax (206) 782-5455

LUGGER NORTHERN LIGHTS

Specifications, materials and dimensions subject to change without notice.
© 1989 Alaska Diesel Electric, Inc. all rights reserved. Litho in U.S.A.
Publication number: L058-07/89

Dealer: