RUSTON RKC DIESEL ENGINES

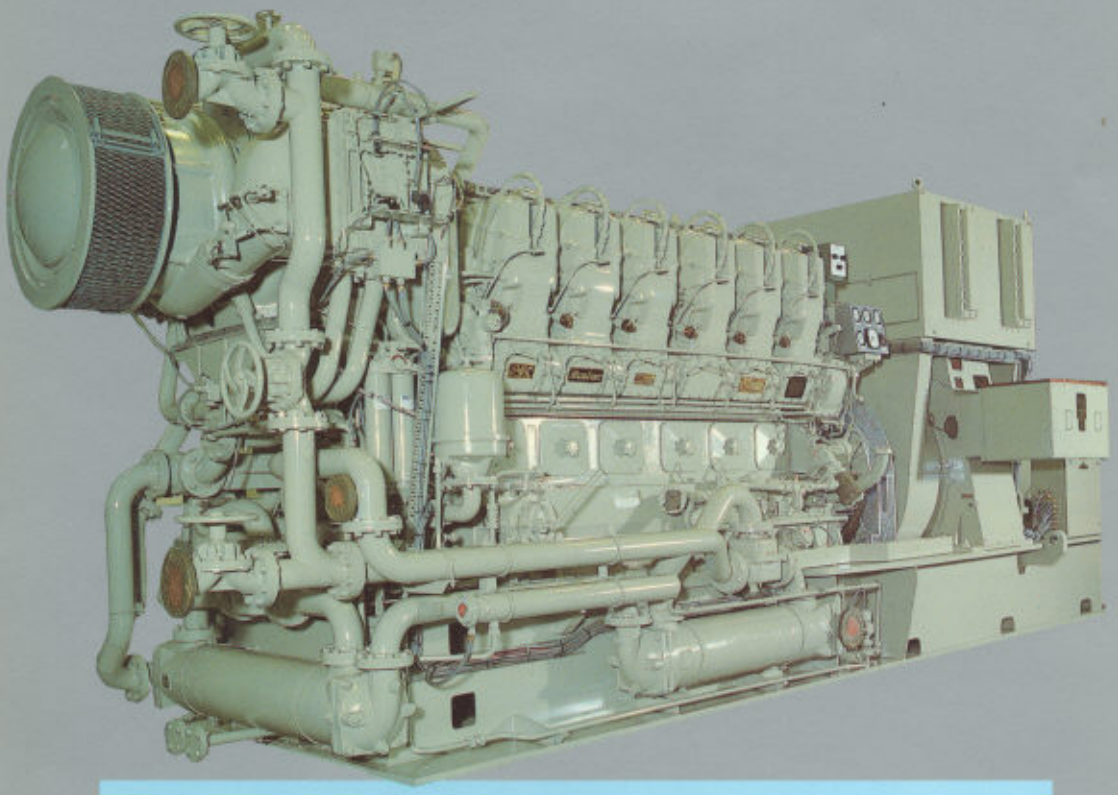

ENGINE DATA

Engine type	**RKC** diesel or residual fuel **RKG** dual fuel gas with pilot diesel fuel for injection
Bore	254 mm (10 in)
Stroke	305 mm (12 in)
Cycle	4 stroke
Compression ratio	Diesel 12.8 Dual fuel 11.8
Mean piston speed	10.16 m/s (2000 ft/min) at 1000 rev/min
Operating speed range	720 to 1000 rev/min
Starting air pressure	6.9 to 10.3 bar (100 to 150 lbf/in²)
Standard rotation	Counter clockwise looking on the drive end of the crankshaft
Fuel specification	**Diesel:** BS2869 1970 Class A1, A2, B1 or B2 ASTM D975 No. 2 D or equivalent **Residual fuel:** Medium fuel oil approximately 180 cst at 50° C **Gaseous fuel:** Natural gas, sludge gas etc., with combustible content at least 95% methane by volume

The Ruston RKC engine is manufactured in 6 cylinder in-line and vee 8, 12 and 16 cylinder forms (vee angle 45 deg.) The engine range covers a power band of 1150-3730 kW (1542-5000 hp) *over a speed range of 720 to 1000 rev/min. This is equivalent to an electrical power band of 1100-3560 kW*.

The RKC engine is suitable for a wide variety of applications including industrial power generation, rail traction and marine generating and propulsion duties. With appropriate derating the engine can operate on residual fuels or as a dual fuel engine on suitable gaseous fuels.

*Outputs shown refer to ISO standard powers.

BEDPLATE

The bedplate is of cast iron construction with rigid transverse diaphragms to support the main crankshaft bearings. Each diaphragm is drilled to feed oil direct from a high pressure gallery to the bearings. Joint faces of the main bearing caps are machined at an angle to ensure positive locking of the caps in the bedplate. There is an additional bearing at the flywheel end of the crankshaft. On the vee engines the side mounting girders are an integral part of the bedplate casting. For rail traction applications shallow sump bedplates with fabricated mountings are available.

CRANKSHAFT

The crankshaft is a one piece forging in alloy steel and conforms to the requirements laid down by Lloyd's Register of Shipping and other Classification Societies. Separate balance weights are fitted to the crankwebs to achieve optimum oil films in the main bearings. The camshaft drive gear, situated at the flywheel end of the crankshaft, is split to permit easy replacement. One or two viscous-fluid dampers are fitted at the free end of the crankshaft, dependent upon application. There is provision for a power take-off shaft to be fitted to the free end of the crankshaft when required.

CRANKCASE AND LINER

The crankcase is of cast iron construction housing both cylinder liners and camshafts. The integral transverse diaphragms provide water

BASIC DIMENSIONS (mm)

6 RKC

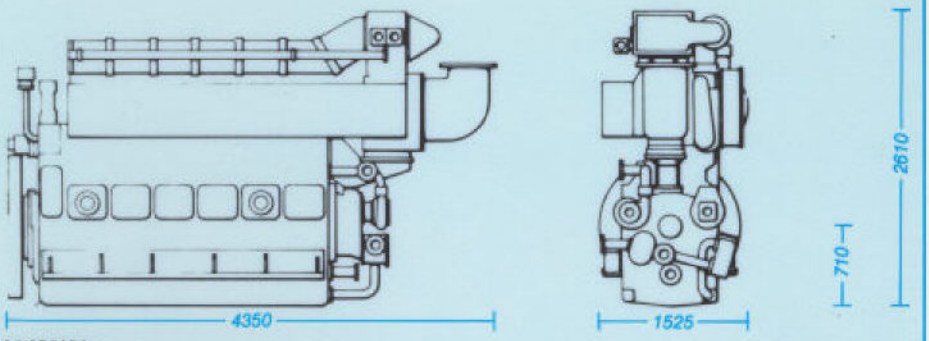

Base engine weight 12110 kg

8 RKC

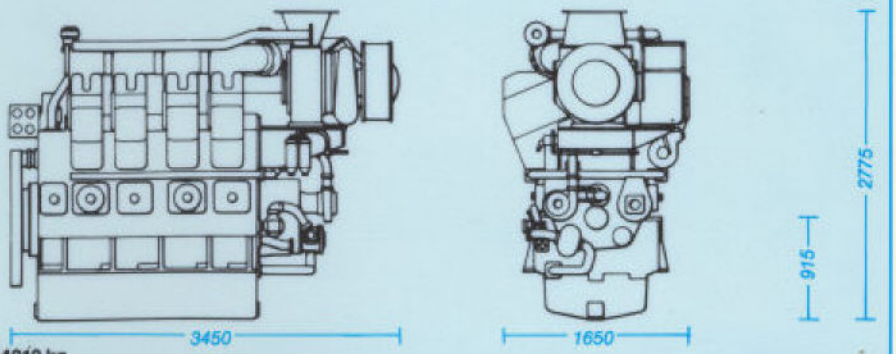

Base engine weight 14210 kg

12 RKC

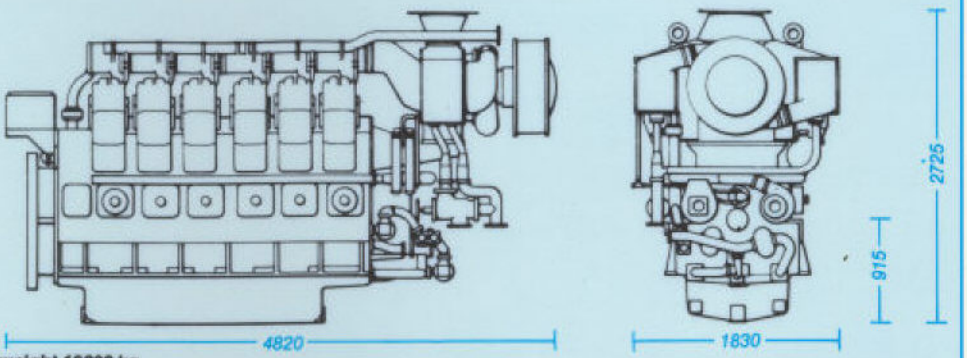

Base engine weight 19290 kg

16 RKC

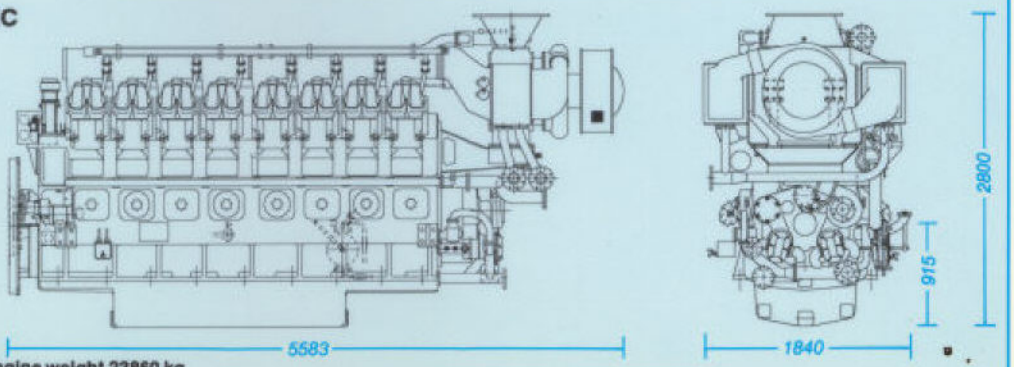

Base engine weight 23860 kg

compartments around the cylinders and also support the camshaft bearings. For vee engines the central vee of the crankcase has been enclosed to provide an integral air chest. Detachable doors provide access to connecting rod and main bearings and to camshafts and governor drive. The individual cylinder liners are of dry flange design, made from iron castings. They are clamped into the crankcase by the cylinder head, being sealed at the top end with metal joints and at the bottom end with synthetic rubber rings. The liner bores are honed to minimise piston ring wear.

FUEL INJECTION

The fuel injection system features individual pumps and injectors for each cylinder. Governing is by a Regulateurs Europa or equivalent unit, the governor drive being taken from the camshaft.

VALVE GEAR AND CAMSHAFT

The valves are operated by camshafts, one for each bank of cylinders. Hardened steel cams are employed throughout. The camshaft is chain driven from the crankshaft on in-line engines but for vee engines a spur gear drive is employed. Each pair of valves is operated by a guided bridge piece, rocker levers and short, stiff push rods to roller type cam followers.

CONNECTING ROD

The connecting rod is an alloy steel forging with a shank of I section and integral bearing housings. The large end is split horizontally, the cap being secured to the rod by four bolts. The shank is drilled to provide an oil passage to the small end and piston.

BEARINGS

Main and large end bearings are pre-finished, steel backed shells lined with a copper-lead bearing material. They are overlay plated to facilitate running in.

PISTON

The piston is of single piece construction with a cast-in cooling passage situated behind the top ring. Cooling oil is transferred from the connecting rod through a slipper arrangement. The combustion bowl is of the Hesselman type. The top ring is carried in an Alfin insert. The ring pack includes a chrome faced top ring, taper faced second and third rings and a conformable oil-control ring.

SLIPPER ASSEMBLY

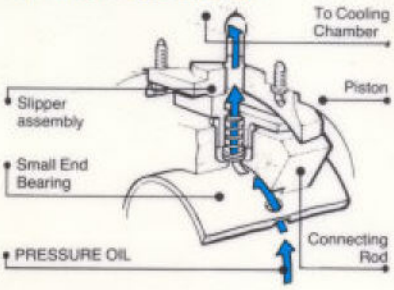

PISTON COOLING ARRANGEMENT

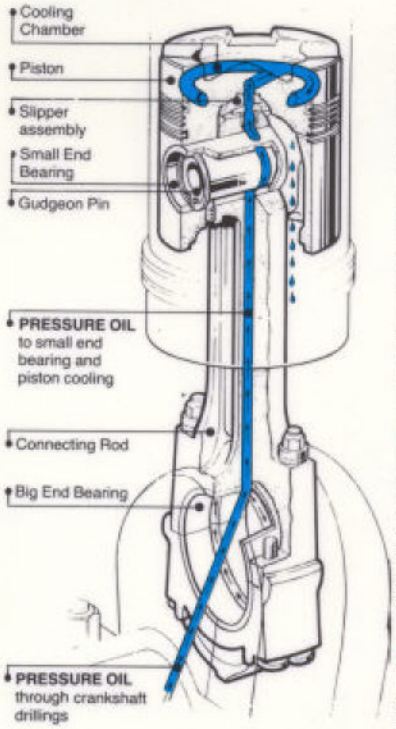

CYLINDER HEAD

Individual cylinder heads are manufactured from iron castings. Each cylinder head carries two inlet and two exhaust valves which seat on renewable wear resisting inserts. The injector is situated outside the valve gear covers.

The cylinder head is of double deck design, the intermediate deck serving to strengthen the head and to improve the distribution of the coolant flow.

LUBRICATING OIL SYSTEM

The engine features wet sump lubrication with an engine driven oil pump. The system includes full flow filtration, thermostat and oil cooler. A pressure relieve valve in the system controls the working pressure.

COOLING SYSTEM

The jacket cooling system is thermostatically controlled using an engine driven water pump.

BALANCER GEAR

Eight cylinder vee engines require secondary balancer gear. The system of rotating weights is located on the middle diaphragm of the bedplate and driven through a single shaft from the flywheel end of the crankshaft.

STARTING SYSTEM

The standard starting arrangement is an air motor driving a ring gear on the flywheel. Alternatively, electric starting systems and compressed air into the cylinders are available.

TURBOCHARGER AND CHARGE COOLERS

Standard equipment includes turbochargers and charge air coolers. A single turbocharger is fitted on all engines, the standard location being at the free-end of the engine.

AUXILIARY DRIVE

The auxiliary drive arrangement employs spur gears driven from the crankshaft through a spring drive. Standard equipment includes positive displacement gear type lubricating oil and fuel oil circulating pumps and a jacket water pump.

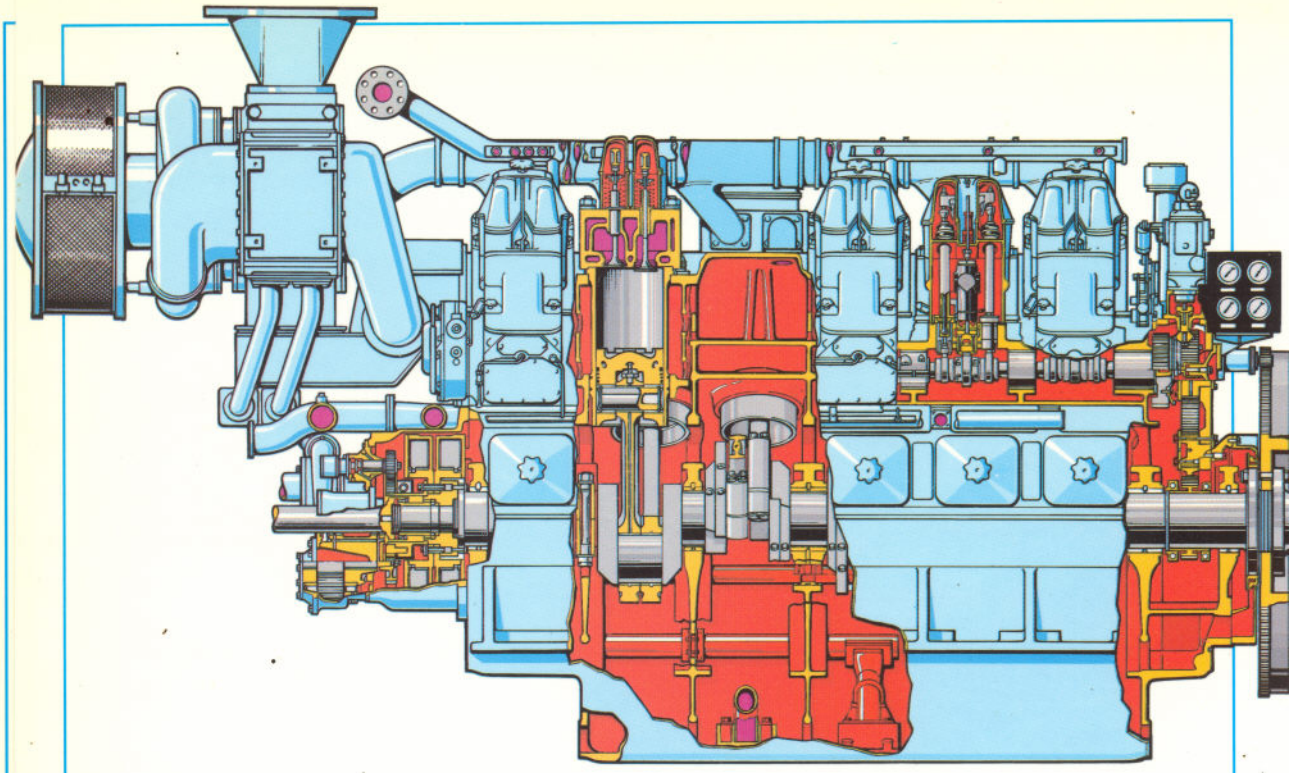

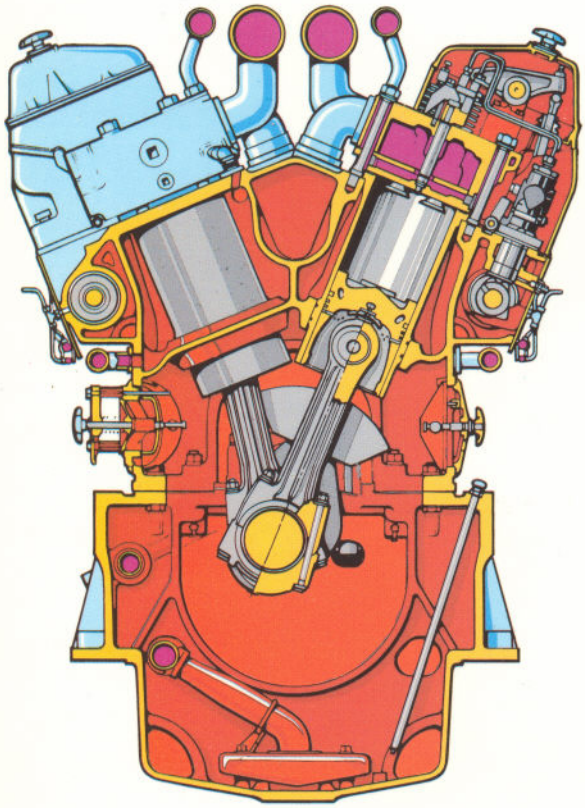

QUALITY APPROVED

Ruston RKC engines are manufactured to exacting standards using the most modern computer aided design, planning and manufacturing techniques.

Emphasis is on stringent quality control at every stage of manufacture and the Ruston quality management system has been approved by Lloyd's Register Quality Assurance Ltd., and by the Ministry of Defence Quality Assurance Board as operating quality control procedures in accordance with AQAP 1, edition 3.

In addition, the company has received the approval of individual customers, including British Rail, British Nuclear Fuels Ltd. and Cable and Wireless Ltd.

Ruston RK marine data

All engines are 4 stroke turbocharged and intercooled

RKC Diesel or residual fuel

RKG Dual fuel gas with pilot diesel fuel for ignition

Bore 254mm (10 in)

Stroke 305mm (12 in)

Compression ratio diesel: 12.8 dual fuel: 11.8

Mean piston speed — 10.16 m/s (2000 ft/min) at 1000 rev/min

Starting air pressure 6.9/10.3 bar (100/150 lbf/in²)

Standard rotation counter clockwise viewed from the drive end of the crankshaft.

Fuel specification
Distillate. BSMA100, Class M1, M2 or equivalent specification.
Residual. BSMA100, Class M4-M7 or equivalent specification having viscosities of 15, 25, 45, 75 cst at 80°C (300, 600, 1500, 3500 Redwood No. 1 at 100°F).

Number of cylinders		6	8	12	16
Cylinder configuration		In line	Vee	Vee	Vee
Dry weight of engine with flywheel	kg	12110	14210	19290	23860
	lb	26670	31340	42540	52620
Sump oil capacity	l	340	578	654	691
	gal	75	127	144	152

Standard Equipment

The standard engine unit is complete with the following equipment:-
Flywheel
Turbocharger(s) complete with *air filter/silencer
Air motor starting
Crankcase explosion relief valves
Water to air charge air coolers
Compression release valve
Hydraulic speed governor — Type RE1100
Lubricating oil pressure relief valve
Lubricating oil filter — Simplex type
Fuel oil filter — Duplex type
*Lubricating oil pressure pump — engine driven
Pre-start lubricating oil priming pump — hand operated for all engines, electrically operated pump for 12 and 16 cylinder
*Engine cooling water pump — engine driven
*Fuel oil pressure pump — engine driven
Engine mounted instrument panel — remote exhaust temperature indicator
Electric tachometer
Hand barring gear

*Essential dependent auxiliary

Standard Optional Equipment

Auto starting
Air in cylinder starting
Reverse direction of rotation — clockwise looking on the drive end of the crankshaft
Special governor types
Air to air charge cooling
Ducted air intake to turbocharger
Power take off on free-end of engine crankshaft
Raw water pump — engine driven
Overload switches
Handed controls
High head raw water pump
Centrifugal bypass lubricating oil filter

Power Outputs

The power outputs below are available under Unrestricted Marine Service Conditions corresponding to an air intake temperature of 45°C and a charge cooler water temperature of 32°C.

Overload power
An overload power of 110% of continuous power is permitted for marine auxiliary generator duty and diesel electric propulsion for a period of 1 hour within a period of 12 hours of operation. Overload is not generally available for propulsion duty with mechanical drive.

For dual fuel engines overload power is achieved by automatic changeover to diesel operation.

Marine unrestricted service power

Engine	Speed	DIESEL		
	rev/min	Brakepower kW	hp	Electrical kW
6RKC	720	1119	1500	1065
	750	1156	1550	1100
	900	1268	1700	1200
	1000	1268	1700	1200
8RKC	720	1492	2000	1420
	750	1530	2050	1450
	900	1656	2220	1580
	1000	1686	2260	1600
12RKC	720	2238	3000	2130
	750	2312	3100	2200
	900	2462	3300	2350
	1000	2536	3400	2400
16RKC	720	2984	4000	2800
	750	3060	4100	2900
	900	3312	4440	3160
	1000	3372	4520	3200

Specific fuel consumption

Percent full load		110	100	75	50	25	110	100	75	50	25
	rev/min	kg/kW-h (brake)					lb/bhp-h				
6RKC and 8RKC	1000	.220	.216	.215	.222	.236	.362	.355	.353	.365	.388
	900	.220	.216	.215	.222	.236	.362	.355	.353	.365	.388
	720/750	.212	.210	.208	.214	.226	.349	.345	.342	.352	.372
	600	.214	.212	.210	.214	.223	.352	.348	.345	.352	.367
12RKC and 16RKC	1000	.217	.213	.211	.218	.233	.357	.350	.347	.358	.383
	900	.212	.210	.208	.214	.226	.348	.345	.342	.352	.372
	720/750	.208	.205	.204	.210	.223	.342	.337	.335	.345	.367
	600	.209	.207	.205	.209	.218	.343	.340	.337	.343	.358
Tolerance		+ 5%					+ 5%				
L.C.V. of fuel		42000 kJ/kg					18056 Btu/lb				

RUSTON DIESELS

Heat dissipation and flow data

Based on unrestricted marine service power output and service conditions

ENGINE TYPE		6RKC				8RKC				12RKC				16RKC			
Engine speed	rev/min	720	750	900	1000	720	750	900	1000	720	750	900	1000	720	750	900	1000
Lubricating oil circulation rate through cooler	l/s gal/h	8.33 6600				9.09 7200				12.88 10200				14.90 11800			
Lubricating oil temperature into cooler	°C °F	77 170				77 170				77 170				77 170			
Lubricating oil heat dissipation	kW Btu/h x 10^3	123 420	128 438	152 520	149 509	164 560	171 584	202 693	198 678	246 840	256 876	304 1040	298 1018	328 1120	342 1168	404 1386	396 1356
Jacket water circulation rate	l/s gal/h	9.09 7200	9.47 7500	11.37 9000	12.63 10000	9.09 7200	9.47 7500	11.37 9000	12.63 10000	18.18 14400	18.94 15000	22.73 18000	25.26 20000	18.18 14400	18.94 15000	22.73 18000	25.26 20000
Jacket water temperature into cooler	°C °F	82 180				82 180				82 180				82 180			
Jacket water heat dissipation	kW Btu/hx10^3	325 1110	337 1152	403 1380	377 1284	433 1480	450 1536	538 1840	502 1712	650 2220	674 2304	806 2760	754 2568	866 2960	900 3072	1076 3680	1004 3424
Secondary water circulation rate	l/s gal/h	9.09 7200	9.47 7500	11.37 9000	12.63 10000	9.09 7200	9.47 7500	11.37 9000	12.63 10000	18.18 14400	18.94 15000	22.73 18000	25.26 20000	18.18 14400	18.94 15000	22.73 18000	25.26 20000
Charge air cooler heat dissipation	kW* Btu/hx10^3	368 1260	377 1284	362 1236	404 1380	491 1680	502 1712	482 1648	538 1840	736 2520	754 2568	724 2472	808 2760	982 3360	1004 3424	964 3296	1076 3680
Combustion air flow rate	kg/s lb/s	2.09 4.61	2.14 4.72	2.33 5.13	2.41 5.31	2.79 6.14	2.86 6.29	3.10 6.84	3.22 7.08	4.18 9.22	4.28 9.44	4.65 10.26	4.82 10.62	5.57 12.29	5.71 12.59	6.20 13.68	6.43 14.16
Exhaust gas flow rate	kg/s lb/s	2.16 4.75	2.21 4.87	2.40 5.29	2.49 5.48	2.87 6.33	2.94 6.49	3.20 7.05	3.32 7.30	4.31 9.50	4.42 9.73	4.80 10.58	4.97 10.96	5.75 12.67	5.89 12.97	6.40 14.11	6.63 14.61
Exhaust gas temperature leaving engine	°C °F	442 830	440 825	455 850	450 840	442 830	440 825	455 850	450 840	442 830	440 825	455 850	450 840	442 830	440 825	455 850	450 840

*The secondary water flow rate through the charge air cooler will depend on the quality of the water available.

Dimensions

Propulsion

	6RKC mm	6RKC in	8RKC mm	8RKC in	12RKC mm	12RKC in	16RKC mm	16RKC in
A	7470	294	6760	266	8150	321	8530	336
B	2360	93	2360	93	2310	91	2260	89
C	1525	60	1650	65	1830	72	1680	66
D	2030	80	1780	70	1780	70	1780	70
E	460	18	500	20	500	20	500	20
F	2600	102	2030	79	2840	111	3650	143
G	1750	69	1420	56	1980	77.8	1520	60
J	710	28	915	36	915	36	915	36

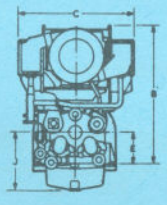

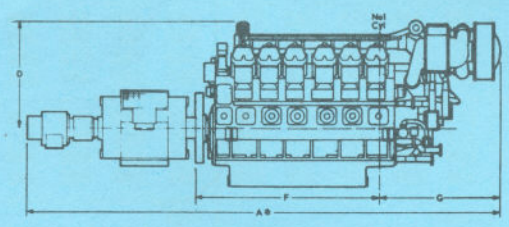

Auxiliary

	6RKCZ mm	6RKCZ in	8RKCZ mm	8RKCZ in	12RKCZ mm	12RKCZ in	16RKCZ mm	16RKCZ in
A	7470	294	6760	266	8150	321	8530	336
B	3060	120	2950	116	3000	118	3200	126
C	2280	90	2180	86	2310	91	2400	96
D	2030	80	1780	70	1780	70	1780	70
E	1140	45	1090	43	1170	46	1420	56
F	2600	102	2030	79	2840	111	3650	143
G	1750	69	1420	56	1980	77	1520	60

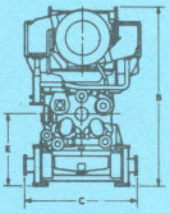

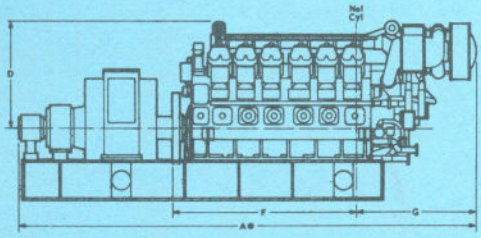

These dimensions are approximate only and will vary according to the alternator or gearbox selected for any particular installation.

RUSTON DIESELS

Ruston Diesels Limited
Vulcan Works
Newton-le-Willows
Merseyside WA12 8RU
England
Telephone: 0925 225151
Fax: 0925 222055
Telex: 627131

Publication No. RD064S
Printed in England

2M0889PPS

RUSTON
DIESELS

RUSTON
DIESELS

Ruston Diesels Limited
Vulcan Works, Newton-le-Willows,
Merseyside, WA12 8RU, England
Tel: 0925 225151 Telex: 627131
Telefax: 0925 222055

Publication No. RD101

Printed in England

1M0788