Two cylinder, four cycle smoothness in a lightweight, compact engine

Our most compact marine diesel engine

The new Westerbeke 12C Two engine has the smallest available envelope (combined length, width, height). This lightweight low profile engine is designed to fit into the smallest of engine compartments. The 12C Two is engineered by Westerbeke, pioneers in marine diesel engines, to provide consistent performance, quietness, durability and above all reliability, year after year.

This new engine is easy to install, economical to operate, and convenient to service.
A full range of options is available allowing you to custom tailor your engine to fit your individual requirements.

Parts and service are available worldwide. Westerbeke engines and generators can be serviced by over 600 authorized dealers strategically located near navigable waterways throughout the United States and Canada, as well as in 20 countries overseas.

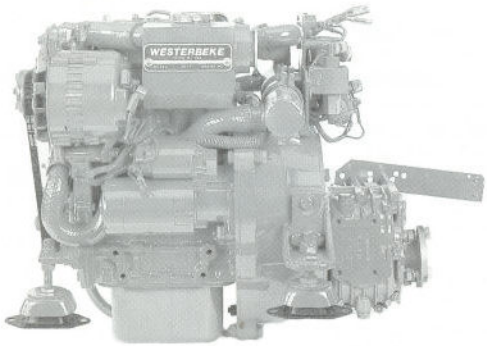

12C Two
Diesel Engine

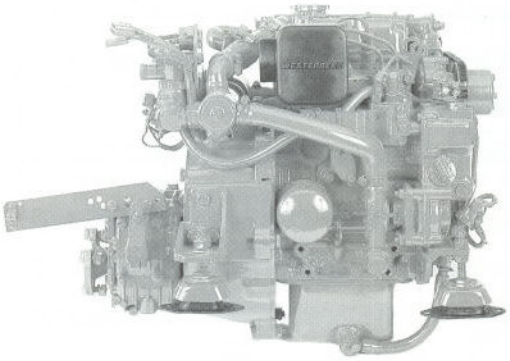

12C Two
Diesel Engine

Many features are standard equipment

- Fresh water cooling
- Engine prewired to plug-in connector
- Self-bleeding fuel system
- 12 volt 50 ampere alternator
- Flow control domestic hot water connections
- Coolant recovery tank
- Throttle, stop, and shift control brackets
- Low oil pressure and high water temperature alarms
- Gear-driven sea water pump
- Mechanical marine gear with 2.05:1 reduction
- Glow plug cold starting aid
- Four point adjustable flex mounts
- Lube oil drain hose
- Tuned air intake silencer
- Operator's Manual and Parts List

05 EKIM 1995

WESTERBEKE
Marine Engine Products

DIESEL ENGINE WESTERBEKE 12C TWO

Performance Data

Horsepower and rpm
12 hp @ 3000 rpm

Maximum torque and rpm
30 lbs/ft @ 2200 rpm

Typical fuel consumption
0.056 US gal/hp/hr
(0.212 liters/hp/hr)

Typical fuel consumption
@ 2500 rpm
0.7 US gal/hr
(2.65 liters/hr)

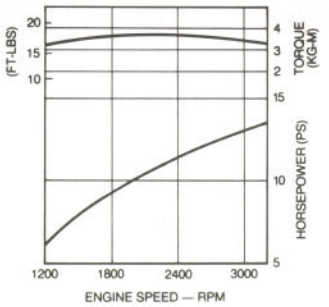

Specifications

Number of cylinders	2 Cylinder vertical in-line
Cycles	4 Cycle
Displacement	38.75 cu. in. (.63 liter)
Bore and stroke	2.99″ x 2.76″ (76 mm x 70 mm)
Compression ratio	23:1
Maximum angle of installation	Not to exceed 14°
Maximum angle of operation	Not to exceed 25°
Crankshaft, direction of rotation	Counterclockwise as viewed from flywheel end
Propeller shaft, direction of rotation	Right hand — std. trans.
Dry weight	225 lbs (102.13 kilos)
Combustion system	Swirl type
Aspiration	Naturally aspirated
Lubrication system	Forced lubrication by gear pump
Cooling system	2.9 quarts (2.7 liters)
Starting aid	12 volt sheathed type glow plug
Engine stop	Manual type
Fuel injection pump	Bosch type
Governor	Centrifugal type
Injectors	Throttle type
Fuel filter	Secondary, replaceable type
Lube oil filter	Full flow, spin-on element
Lubricant capacity	0.634 US gal (2.4 liters)
Fuel transfer pump	Mechanical diaphragm type
Fuel supply and return piping	1/4″ ID (.635 mm) minimum 3/8″ ID (.952 mm) maximum
Starting motor	12 volt, solenoid, actuated shift
Battery charging alternator	50 ampere (12 volts)
Cold cranking amps	125 amps
Alternator/regulator	Automatic, solid state built-in
Electrical system	12 volts DC, negative ground

Construction — Engine Components

Cylinder head	Cast iron
Cylinder block	Cast iron
Crankshaft	Forged crankshaft, three main bearings
Valves	Overhead valves, rotating type
Fuel system	Self bleeding
Intake system	Tuned intake silencer for maximum noise reduction
Cooling system	Fresh water-cooled with tube and shell type heat exchanger
Exhaust manifold	Cast aluminum, fresh water-cooled with built-in expansion tank

Standard Equipment

Standard gear ratio	2.05:1
Mounting centers	14.56″
Flexible mounts	Adjustable fail-safe rubber type
Flow control domestic hot water connection	
Coolant recovery tank	
Battery charging alternator	
Starting aide	
Control brackets	For all control attachments
Prewired Engine	
Gear-driven sea water pump	
Lube oil drain hose	
Tuned air intake silencer	
Oil fill	Top and service side
Circuit breaker protected electrical system	
Operator's Manual	
Parts List	

Optional Equipment

Captain panel with alarm (tachometer with lights)	
Admiral panel with alarms (tachometer with gauges)	
Dual station senders	
Other gear ratios	Consult local Distributor
—	
Remote expansion tank	
Fuel/water separator	
Muffler and fittings	
"A" on board spare parts kit	
"B" extended cruising spare parts kit	
Anti-siphon valve for overboard cooling discharge water	
Technical Manual	
Exhaust connection (water injected 90°, 45° elbows & riser)	
Propeller shaft couplings (rigid/flexible) — available standard sizes	

Dimensions

Inches
(Millimeters)

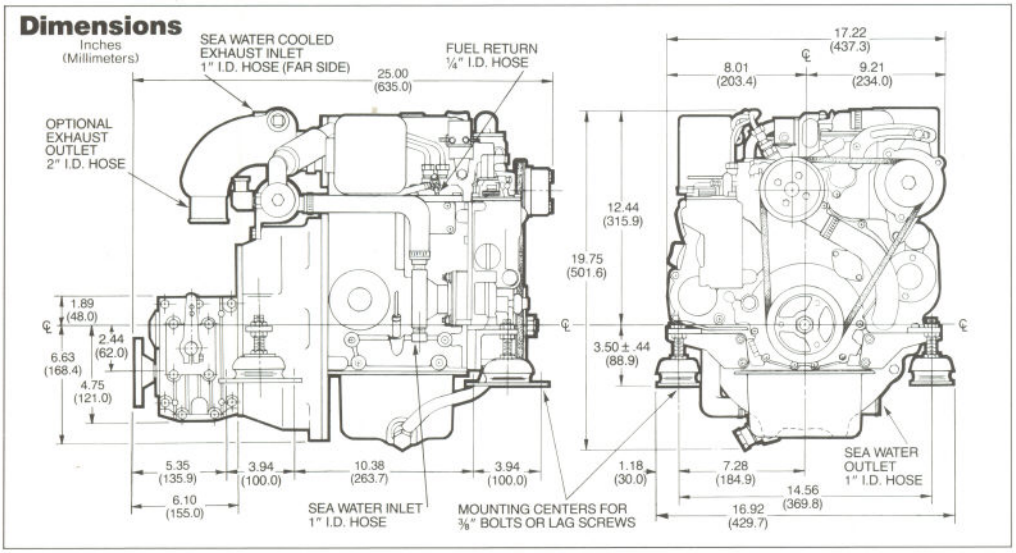

Authorized Dealer

Two cylinder, four cycle smoothness in a lightweight, compact engine

A new generation of marine diesel engines

The new Westerbeke B advanced series engines have the smallest "envelope" available ("envelope" is the combined length, width, height). These lightweight low profile engines are designed to fit into the smallest of engine compartments. They are engineered by Westerbeke, pioneers in marine diesel engines, to provide consistent performance, quietness, durability and above all reliability, year after year.

The new B series engines are easy to install, economical to operate, and convenient to service. A full range of options is available allowing you to custom tailor your engine to fit your individual requirements.

Parts and service are available worldwide. Westerbeke engines and generators can be serviced by over 600 authorized dealers strategically located in major navigable waterways in the United States and Canada, as well as in 29 countries overseas.

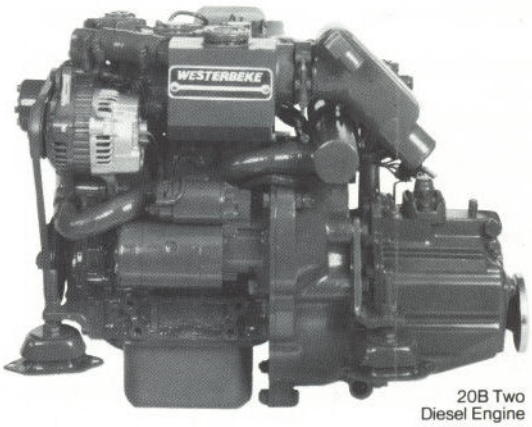

20B Two
Diesel Engine

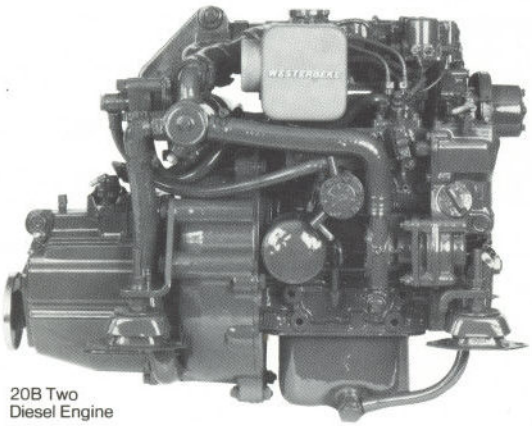

20B Two
Diesel Engine

Many features are standard equipment

- Fresh water cooling
- Engine prewired to plug-in connector
- Self-bleeding fuel system
- 12 volt 50 ampere alternator
- Flow control domestic hot water connections
- Coolant recovery tank
- Throttle, stop, and shift control brackets
- Low oil pressure and high water temperature alarms
- Gear-driven sea water pump
- Short profile marine gear with 2.47:1 reduction
- Glow plug cold starting aid
- Four point adjustable flex mounts
- Lube oil drain hose
- Tuned air intake silencer
- Operator's Manual and Parts List

05 EKIM 1995

WESTERBEKE
Marine Products

DIESEL ENGINE WESTERBEKE 20B TWO

Performance Data

Horsepower and rpm
18 hp @ 3600 rpm
13.4 KW

Maximum torque and rpm
30 lbs/ft @ 2200 rpm

Typical fuel consumption
0.056 US gal/hp/hr
(0.212 liters/hp/hr)

Typical fuel consumption
@ 2500 rpm
0.7 US gal/hr
(2.65 liters/hr)

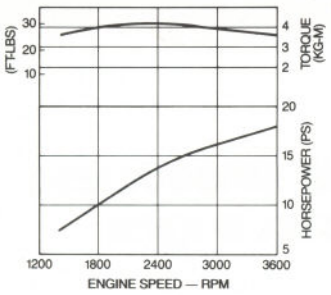

Specifications

Number of cylinders	2 Cylinder vertical in-line
Cycles	4 Cycle
Displacement	38.75 cu. in. (.63 liter)
Bore and stroke	2.99" x 2.76" (76 mm x 70 mm)
Compression ratio	23:1
Maximum angle of installation	Not to exceed 14°
Maximum angle of operation	Not to exceed 25°
Crankshaft, direction of rotation	Counterclockwise as viewed from flywheel end
Propeller shaft, direction of rotation	Right hand — std. trans.
Dry weight	228 lbs (103.4 kilos)
Combustion system	Swirl type
Aspiration	Naturally aspirated
Lubrication system	Forced lubrication by gear pump
Cooling system	2.9 quarts (2.7 liters)
Starting aid	12 volt sheathed type glow plug
Engine stop	Manual type
Fuel injection pump	Bosch type
Governor	Centrifugal type
Injectors	Throttle type
Fuel filter	Secondary, replaceable type
Lube oil filter	Full flow, spin-on element
Lubricant capacity	0.634 US gal (2.4 liters)
Fuel transfer pump	Electric self priming
Fuel supply and return piping	1/4" ID (.635 mm) minimum 3/8" ID (.952 mm) maximum
Starting motor	12 volt, solenoid, actuated shift
Battery charging alternator	50 ampere (12 volts)
Cold cranking amps	125 amps
Alternator/regulator	Automatic, solid state built-in
Electrical system	12 volts DC, negative ground

Construction — Engine Components

Cylinder head	Cast iron
Cylinder block	Cast iron
Crankshaft	Forged crankshaft, three main bearings
Valves	Overhead valves, rotating type
Fuel system	Self bleeding
Intake system	Tuned intake silencer for maximum noise reduction
Cooling system	Fresh water-cooled with tube and shell type heat exchanger
Exhaust manifold	Cast aluminum, fresh water-cooled with built-in expansion tank

Standard Equipment

Standard gear ratio	2.63:1
Mounting centers	14.56"
Flexible mounts	Adjustable fail-safe rubber type
Flow control domestic hot water connection	
Coolant recovery tank	
Battery charging alternator	
Starting aide	
Control brackets	For all control attachments
Prewired Engine	
Gear-driven sea water pump	
Lube oil drain hose	
Gear oil cooler	
Oil fill	Top and service side
Circuit breaker protected electrical system	
Operator's Manual	
Parts List	

Optional Equipment

Captain panel with alarm (tachometer with lights)	
Admiral panel with alarms (tachometer with gauges)	
Dual station senders	
Other gear ratios	Consult local Distributor
—	
Remote expansion tank	
Fuel/water separator	
Muffler and fittings	
"A" on board spare parts kit	
"B" extended cruising spare parts kit	
Anti-siphon valve for overboard cooling discharge water	
Technical Manual	
Exhaust connection (water injected 90°, 45° elbows & riser)	
Propeller shaft couplings (rigid/flexible) — available standard sizes	

Dimensions

Inches
(Millimeters)

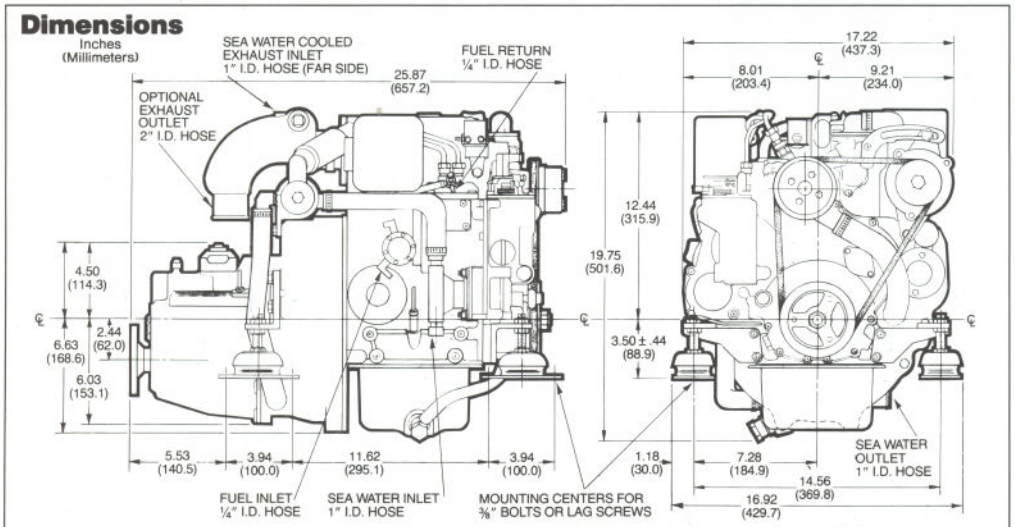

Authorized Dealer

WESTERBEKE CORP., AVON INDUSTRIAL PARK, AVON, MA 02322 U.S.A. • TELEPHONE: (508) 588-7700 • FAX: (508) 559-9323 • CABLE: WESTCORP
Specifications Subject to Change without Notice.

Three cylinder, four cycle smoothness in a lightweight, compact engine

A new generation of marine diesel engines

The new Westerbeke B advanced series engines have the smallest "envelope" available ("envelope" is the combined length, width, height). These lightweight low profile engines are designed to fit into the smallest of engine compartments. They are engineered by Westerbeke, pioneers in marine diesel engines, to provide consistent performance, quietness, durability and above all reliability, year after year.

The new B series engines are easy to install, economical to operate, and convenient to service. A full range of options is available allowing you to custom tailor your engine to fit your individual requirements.

Parts and service are available worldwide. Westerbeke engines and generators can be serviced by over 600 authorized dealers strategically located in major navigable waterways in the United States and Canada, as well as in 29 countries overseas.

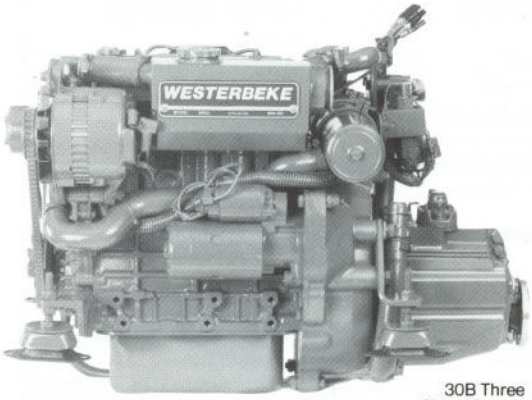

30B Three
Diesel Engine

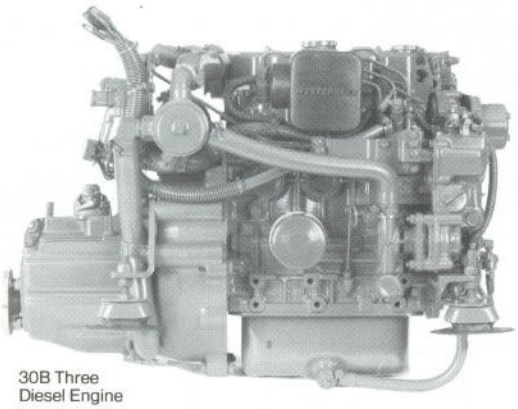

30B Three
Diesel Engine

Many features are standard equipment

- Fresh water cooling
- Engine prewired to plug-in connector
- Self-bleeding fuel system
- 12 volt 50 ampere alternator
- Flow control domestic hot water connections
- Coolant recovery tank
- Throttle, stop, and shift control brackets
- Low oil pressure and high water termperature alarms
- Gear-driven sea water pump
- Short profile marine gear with 2.47:1 reduction
- Glow plug cold starting aid
- Four point adjustable flex mounts
- Lube oil drain hose
- Tuned air intake silencer
- Operator's Manual and Parts List

05 EKIM 1995

WESTERBEKE
Marine Products

DIESEL ENGINE WESTERBEKE 30B THREE

Performance Data

Horsepower and rpm
27 hp @ 3600 rpm
20.1 KW

Maximum torque and rpm
43 lbs/ft @ 2200 rpm

Typical fuel consumption
0.057 US gal/hp/hr
(0.215 liters/hp/hr)

Typical fuel consumption
@ 2500 rpm
1.2 GPH
4.54 L/H

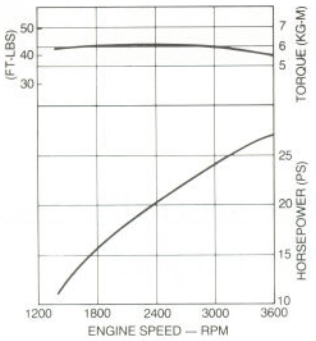

Construction — Engine Components

Cylinder head	Cast iron
Cylinder block	Cast iron
Crankshaft	Forged crankshaft, four main bearings
Valves	Overhead valves, rotating type
Fuel system	Self bleeding
Intake system	Tuned intake silencer for maximum noise reduction
Cooling system	Fresh water-cooled with tube and shell type heat exchanger
Exhaust manifold	Cast aluminum, fresh water-cooled with built-in expansion tank

Specifications

Number of cylinders	3 Cylinder vertical in-line
Cycles	4 Cycle
Displacement	58.09 cu. in. (.95 liter)
Bore and stroke	2.99" x 2.76" (76 mm x 70 mm)
Compression ratio	23:1
Maximum angle of installation	Not to exceed 14°
Maximum angle of operation	Not to exceed 25°
Crankshaft, direction of rotation	Counterclockwise as viewed from flywheel end
Propeller shaft, direction of rotation	Right hand — std. trans.
Dry weight	274 lbs (124.3 kilos)
Combustion system	Swirl type
Aspiration	Naturally aspirated
Lubrication system	Forced lubrication by gear pump
Cooling system	4 quarts (3.8 liters)
Starting aid	12 volt sheathed type glow plug
Engine stop	Manual type
Fuel injection pump	Bosch type
Governor	Centrifugal type
Injectors	Throttle type
Fuel filter	Secondary, replaceable type
Lube oil filter	Full flow, spin-on element
Lubricant capacity	0.95 US gal (3.6 liters)
Fuel transfer pump	Electric
Fuel supply and return piping	1/4" ID (.635 mm) minimum 3/8" ID (.952 mm) maximum
Starting motor	12 volt, solenoid, actuated shift
Battery charging alternator	50 ampere (12 volts)
Cold cranking amps	190 amps
Alternator/regulator	Automatic, solid state built-in
Electrical system	12 volts DC, negative ground

Standard Equipment

Standard gear ratio	2.47:1
Mounting centers	14.56"
Flexible mounts	Adjustable fail-safe rubber type
Flow control domestic hot water connection	
Coolant recovery tank	
Battery charging alternator	50 amp
Starting aide	
Control brackets	For all control attachments
Prewired Engine	
Gear-driven sea water pump	
Lube oil drain hose	
Gear oil cooler	
Oil fill	Top and service side
Circuit breaker protected electrical system	
Operator's Manual	
Parts List	

Optional Equipment

Captain panel with alarm (tachometer with lights)	
Admiral panel with alarms (tachometer with gauges)	
Dual station senders	
Other gear ratios	Consult local Distributor
—	
Remote expansion tank	
Fuel/water separator	
Muffler and fittings	
"A" on board spare parts kit	
"B" extended cruising spare parts kit	
Anti-siphon valve for overboard cooling discharge water	
Technical Manual	
Exhaust connection (water injected 90°, 45° elbows & riser)	
Propeller shaft couplings (rigid/flexible) — available standard sizes	

Dimensions

Inches
(Millimeters)

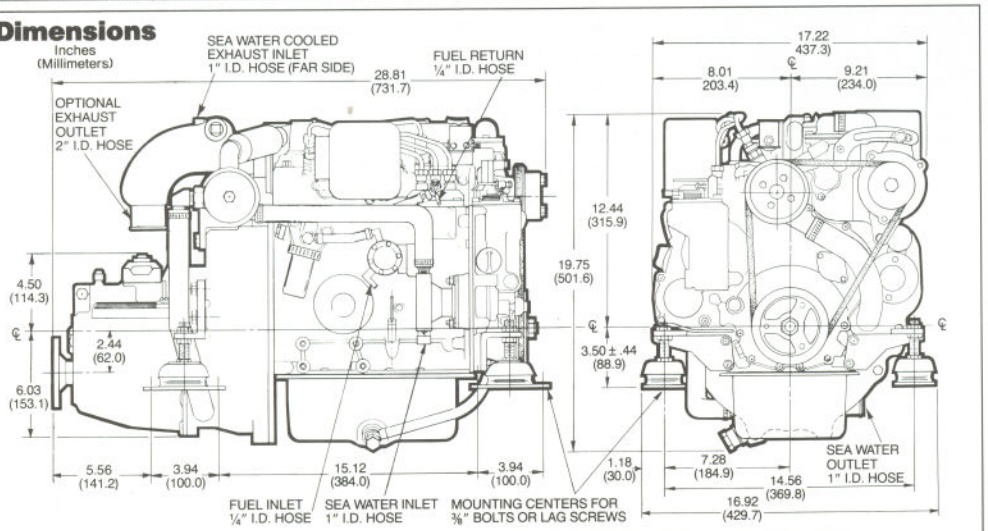

Authorized Dealer

WESTERBEKE CORP., AVON INDUSTRIAL PARK, AVON, MA 02322 U.S.A. • TELEPHONE: (508) 588-7700 • FAX: (508) 559-9323 • CABLE: WESTCORP

Three cylinder, four cycle smoothness in a lightweight, compact engine

A new generation of marine diesel engines

The new Westerbeke B advanced series engines have the smallest "envelope" available ("envelope" is the combined length, width, height). These lightweight low profile engines are designed to fit into the smallest of engine compartments. They are engineered by Westerbeke, pioneers in marine diesel engines, to provide consistent performance, quietness, durability and above all reliability, year after year.

The new B series engines are easy to install, economical to operate, and convenient to service. A full range of options is available allowing you to custom tailor your engine to fit your individual requirements.

Parts and service are available worldwide. Westerbeke engines and generators can be serviced by over 600 authorized dealers strategically located in major navigable waterways in the United States and Canada, as well as in 29 countries overseas.

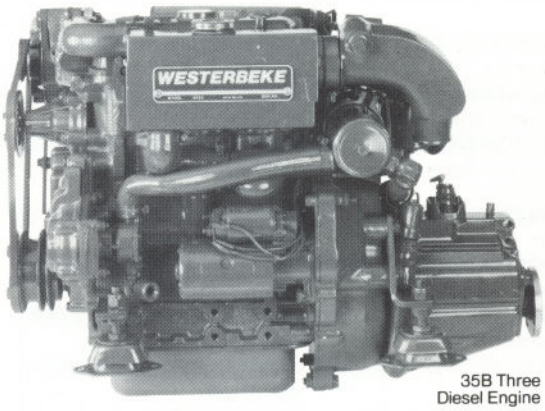

35B Three
Diesel Engine

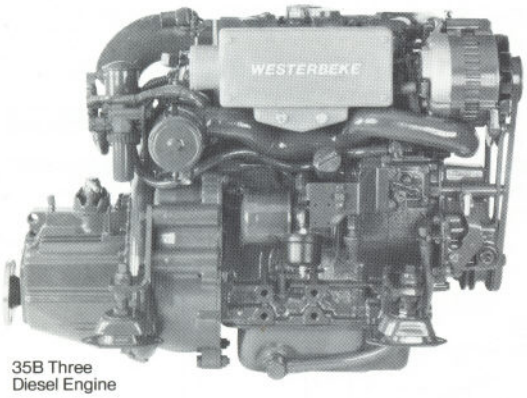

35B Three
Diesel Engine

Many features are standard equipment

- Fresh water cooling
- Engine prewired to plug-in connector
- Self-bleeding fuel system
- 12 volt 50 ampere alternator
- Flow control domestic hot water connections
- Coolant recovery tank
- Throttle, stop, and shift control brackets
- Low oil pressure and high water temperature alarms
- Gear-driven sea water pump
- Short profile marine gear with 2.47:1 reduction
- Glow plug cold starting aid
- Four point adjustable flex mounts
- Lube oil drain hose
- Tuned air intake silencer
- Operator's Manual and Parts List

05 EKIM 1995

WESTERBEKE
Marine Products

DIESEL ENGINE WESTERBEKE 35B THREE

Performance Data

Horsepower and rpm
32 hp @ 3600 rpm
23.8 KW

Maximum torque and rpm
41 lbs/ft @ 2300 rpm

Typical fuel consumption
0.055 US gal/hp/hr
(0.208 liters/hp/hr)

Typical fuel consumption
@ 2500 rpm
1.2 GPH
4.54 L/H

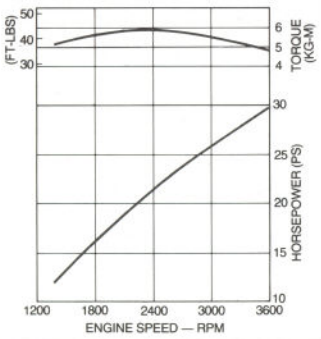

Construction — Engine Components

Cylinder head	Cast iron
Cylinder block	Cast iron
Crankshaft	Forged crankshaft, four main bearings
Valves	Overhead valves, rotating type
Fuel system	Self bleeding
Intake system	Tuned intake silencer for maximum noise reduction
Cooling system	Fresh water-cooled with tube and shell type heat exchanger
Exhaust manifold	Cast aluminum, fresh water-cooled with built-in expansion tank

Specifications

Number of cylinders	3 Cylinder vertical in-line
Cycles	4 Cycle
Displacement	68.23 cu. in. (1.118 liter)
Bore and stroke	3.07″ x 3.07″ (78 mm x 78 mm)
Compression ratio	23:1
Maximum angle of installation	Not to exceed 14°
Maximum angle of operation	Not to exceed 25°
Crankshaft, direction of rotation	Counterclockwise as viewed from flywheel end
Propeller shaft, direction of rotation	Right hand — std. trans.
Dry weight	368 lbs (166.9 kilos)
Combustion system	Swirl type
Aspiration	Naturally aspirated
Lubrication system	Forced lubrication by gear pump
Cooling system	6 quarts (5.68 liters)
Starting aid	12 volt sheathed type glow plug
Engine stop	Manual type
Fuel injection pump	Bosch type
Governor	Centrifugal type
Injectors	Throttle type
Fuel filter	Primary and secondary
Lube oil filter	Full flow, spin-on element
Lubricant capacity	1.057 US gal (4 liters)
Fuel transfer pump	Electrical
Fuel supply and return piping	1/4″ ID (.635 mm) minimum 3/8″ ID (.952 mm) maximum
Starting motor	12 volt, solenoid, actuated shift
Battery charging alternator	50 ampere (12 volts)
Cold cranking amps	190 amps
Alternator/regulator	Automatic, solid state built-in
Electrical system	12 volts DC, negative ground

Standard Equipment

Standard gear ratio	2.47:1
Mounting centers	14.56″ or 16.00″
Flexible mounts	Adjustable fail-safe rubber type
Flow control domestic hot water connection	
Coolant recovery tank	
Battery charging alternator	
Starting aide	
Control brackets	For all control attachments
Prewired Engine	
Gear-driven sea water pump	
Lube oil drain hose	
Gear oil cooler	
Oil fill	Top and service side
Circuit breaker protected electrical system	
Operator's Manual	
Parts List	

Optional Equipment

Captain panel with alarm (tachometer with lights)	
Admiral panel with alarms (tachometer with gauges)	
Dual station senders	
Other gear ratios	Consult local Distributor
72 amp alternator in place of standard	
Remote expansion tank	
Fuel/water separator	
Muffler and fittings	
"A" on board spare parts kit	
"B" extended cruising spare parts kit	
Anti-siphon valve for overboard cooling discharge water	
Technical Manual	
Exhaust connection (water injected 90°, 45° elbows & riser)	
Propeller shaft couplings (rigid/flexible) — available standard sizes	

Dimensions

Inches
(Millimeters)

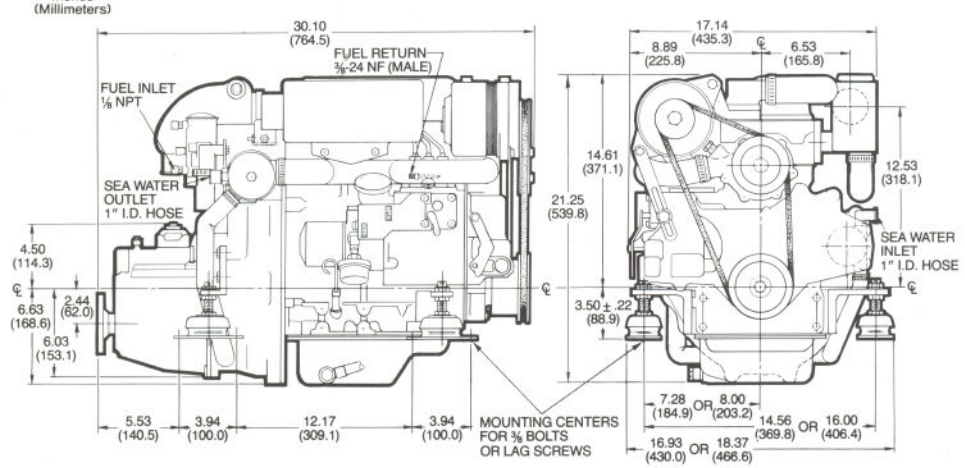

Authorized Dealer

Four cylinder, four cycle smoothness in a lightweight, compact engine

A new generation of marine diesel engines

The new Westerbeke B advanced series engines have the smallest "envelope" available ("envelope" is the combined length, width, height). These lightweight low profile engines are designed to fit into the smallest of engine compartments. They are engineered by Westerbeke, pioneers in marine diesel engines, to provide consistent performance, quietness, durability and above all reliability, year after year.

The new B series engines are easy to install, economical to operate, and convenient to service. A full range of options is available allowing you to custom tailor your engine to fit your individual requirements.

Parts and service are available worldwide. Westerbeke engines and generators can be serviced by over 600 authorized dealers strategically located in major navigable waterways in the United States and Canada, as well as in 29 countries overseas.

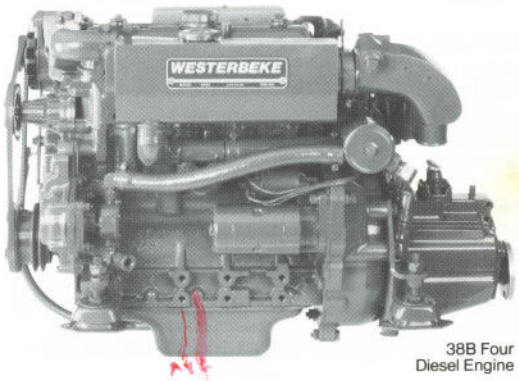

38B Four
Diesel Engine

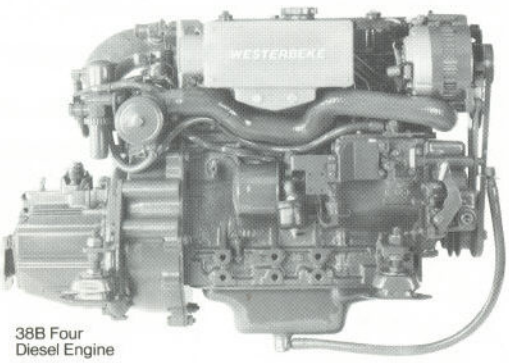

38B Four
Diesel Engine

Many features are standard equipment

- Fresh water cooling
- Engine prewired to plug-in connector
- Self-bleeding fuel system
- 12 volt 50 ampere alternator
- Flow control domestic hot water connections
- Coolant recovery tank
- Throttle, stop, and shift control brackets
- Low oil pressure and high water termperature alarms
- Gear-driven sea water pump
- Short profile marine gear with 2.47:1 reduction
- Glow plug cold starting aid
- Four point adjustable flex mounts
- Lube oil drain hose
- Tuned air intake silencer
- Operator's Manual and Parts List

05 EKIM 1995

WESTERBEKE
Marine Engine Products

DIESEL ENGINE WESTERBEKE 38B FOUR

Performance Data

Horsepower and rpm
37 hp @ 3600 rpm
27.5 KW

Maximum torque and rpm
53 lbs/ft @ 2400 rpm

Typical fuel consumption
0.055 US gal/hp/hr
(0.208 liters/hp/hr)

Typical fuel consumption
@ 2500 rpm
1.6 GPH
6.05 L/H

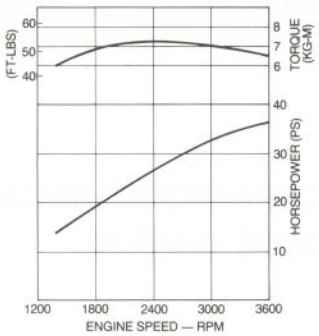

Specifications

Number of cylinders	4 Cylinder vertical in-line
Cycles	4 Cycle
Displacement	79.64 cu. in. (1.305 liter)
Bore and stroke	2.87" x 3.07" (73 mm x 78 mm)
Compression ratio	23:1
Maximum angle of installation	Not to exceed 14°
Maximum angle of operation	Not to exceed 25°
Crankshaft, direction of rotation	Counterclockwise as viewed from flywheel end
Propeller shaft, direction of rotation	Right hand — std. trans.
Dry weight	419 lbs (190.0 kilos)
Combustion system	Swirl type
Aspiration	Naturally aspirated
Lubrication system	Forced lubrication by gear pump
Cooling system	7 quarts (6.6 liters)
Starting aid	12 volt sheathed type glow plug
Engine stop	Manual type
Fuel injection pump	Bosch type
Governor	Centrifugal type
Injectors	Throttle type
Fuel filter	Primary and secondary
Lube oil filter	Full flow, spin-on element
Lubricant capacity	1.189 US gal (4.5 liters)
Fuel transfer pump	Electrical
Fuel supply and return piping	1/4" ID (.635 mm) minimum 3/8" ID (.952 mm) maximum
Starting motor	12 volt, solenoid, actuated shift
Battery charging alternator	50 ampere (12 volts)
Cold cranking amps	190 amps
Alternator/regulator	Automatic, solid state built-in
Electrical system	12 volts DC, negative ground

Construction — Engine Components

Cylinder head	Cast iron
Cylinder block	Cast iron
Crankshaft	Forged crankshaft, five main bearings
Valves	Overhead valves, rotating type
Fuel system	Self bleeding
Intake system	Tuned intake silencer for maximum noise reduction
Cooling system	Fresh water-cooled with tube and shell type heat exchanger
Exhaust manifold	Cast aluminum, fresh water-cooled with built-in expansion tank

Standard Equipment

Standard gear ratio	2.47:1
Mounting centers	14.56" or 16.00"
Flexible mounts	Adjustable fail-safe rubber type
Flow control domestic hot water connection	
Coolant recovery tank	
Battery charging alternator	
Starting aide	
Control brackets	For all control attachments
Prewired Engine	
Gear-driven sea water pump	
Lube oil drain hose	
Gear oil cooler	
Oil fill	Top
Circuit breaker protected electrical system	
Operator's Manual	
Parts List	

Optional Equipment

Captain panel with alarm (tachometer with lights)	
Admiral panel with alarms (tachometer with gauges)	
Dual station senders	
Other gear ratios	Consult local Distributor
Hydraulic transmissions	Consult local Distributor
Remote expansion tank	
72 amp alternator in place of standard	
Muffler and fittings	
"A" on board spare parts kit	
"B" extended cruising spare parts kit	
Anti-siphon valve for overboard cooling discharge water	
Technical Manual	
Exhaust connection (water injected 90°, 45° elbows & riser)	
Propeller shaft couplings (rigid/flexible) — available standard sizes	

Dimensions

Inches
(Millimeters)

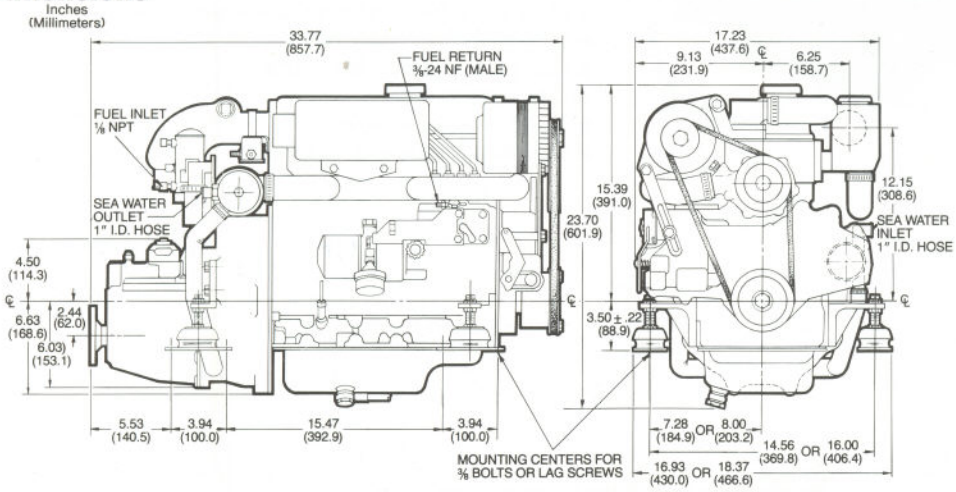

Authorized Dealer

Four cylinder, four cycle smoothness in a lightweight, compact engine

A new generation of marine diesel engines

The new Westerbeke B advanced series engines have the smallest "envelope" available ("envelope" is the combined length, width, height). These lightweight low profile engines are designed to fit into the smallest of engine compartments. They are engineered by Westerbeke, pioneers in marine diesel engines, to provide consistent performance, quietness, durability and above all reliability, year after year.

The new B series engines are easy to install, economical to operate, and convenient to service. A full range of options is available allowing you to custom tailor your engine to fit your individual requirements.

Parts and service are available worldwide. Westerbeke engines and generators can be serviced by over 600 authorized dealers strategically located in major navigable waterways in the United States and Canada, as well as in 29 countries overseas.

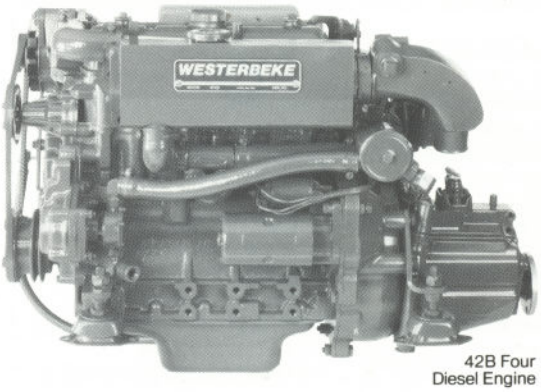

42B Four
Diesel Engine

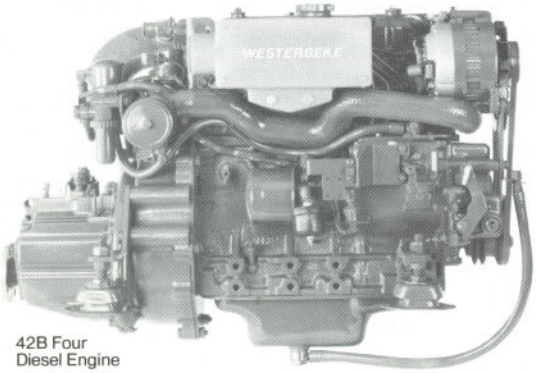

42B Four
Diesel Engine

Many features are standard equipment

- Fresh water cooling
- Engine prewired to plug-in connector
- Self-bleeding fuel system
- 12 volt 50 ampere alternator
- Flow control domestic hot water connections
- Coolant recovery tank
- Throttle, stop, and shift control brackets
- Low oil pressure and high water termperature alarms
- Gear-driven sea water pump
- Short profile marine gear with 2.47:1 reduction
- Glow plug cold starting aid
- Four point adjustable flex mounts
- Lube oil drain hose
- Tuned air intake silencer
- Operator's Manual and Parts List

05 EKIM 1995

WESTERBEKE
Marine Products

DIESEL ENGINE WESTERBEKE 42B FOUR

WESTERBEKE
Diesel Engine

Performance Data

Horsepower and rpm
42 hp @ 3600 rpm
31.3 KW

Maximum torque and rpm
56 lbs/ft @ 2500 rpm

Typical fuel consumption
0.055 US gal/hp/hr
(0.208 liters/hp/hr)

Typical fuel consumption
@ 2500 rpm
1.8 GPH
6.81 L/H

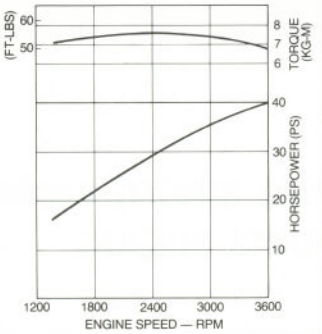

Specifications

Number of cylinders	4 Cylinder vertical in-line
Cycles	4 Cycle
Displacement	90.93 cu. in. (1.49 liter)
Bore and stroke	3.07″ x 3.07″ (78 mm x 78 mm)
Compression ratio	23:1
Maximum angle of installation	Not to exceed 14°
Maximum angle of operation	Not to exceed 25°
Crankshaft, direction of rotation	Counterclockwise as viewed from flywheel end
Propeller shaft, direction of rotation	Right hand — std. trans.
Dry weight	419 lbs (190.0 kilos)
Combustion system	Swirl type
Aspiration	Naturally aspirated
Lubrication system	Forced lubrication by gear pump
Cooling system	7 quarts (6.6 liters)
Starting aid	12 volt sheathed type glow plug
Engine stop	Manual type
Fuel injection pump	Bosch type
Governor	Centrifugal type
Injectors	Throttle type
Fuel filter	Primary and secondary
Lube oil filter	Full flow, spin-on element
Lubricant capacity	1.189 US gal (4.5 liters)
Fuel transfer pump	Electrical
Fuel supply and return piping	1/4″ ID (.635 mm) minimum 3/8″ ID (.952 mm) maximum
Starting motor	12 volt, solenoid, actuated shift
Battery charging alternator	50 ampere (12 volts)
Cold cranking amps	190 amps
Alternator/regulator	Automatic, solid state built-in
Electrical system	12 volts DC, negative ground

Construction — Engine Components

Cylinder head	Cast iron
Cylinder block	Cast iron
Crankshaft	Forged crankshaft, five main bearings
Valves	Overhead valves, rotating type
Fuel system	Self bleeding
Intake system	Tuned intake silencer for maximum noise reduction
Cooling system	Fresh water-cooled with tube and shell type heat exchanger
Exhaust manifold	Cast aluminum, fresh water-cooled with built-in expansion tank

Standard Equipment

Standard gear ratio	2.47:1
Mounting centers	14.56″ or 16.00″
Flexible mounts	Adjustable fail-safe rubber type
Flow control domestic hot water connection	
Coolant recovery tank	
Battery charging alternator	
Starting aide	
Control brackets	For all control attachments
Prewired Engine	
Gear-driven sea water pump	
Lube oil drain hose	
Gear oil cooler	
Oil fill	Top and service side
Circuit breaker protected electrical system	
Operator's Manual	
Parts List	

Optional Equipment

Captain panel with alarm (tachometer with lights)	
Admiral panel with alarms (tachometer with gauges)	
Dual station senders	
Other gear ratios	Consult local Distributor
Hydraulic transmissions	Consult local Distributor
Remote expansion tank	
72 amp alternator in place of standard	
Muffler and fittings	
"A" on board spare parts kit	
"B" extended cruising spare parts kit	
Anti-siphon valve for overboard cooling discharge water	
Technical Manual	
Exhaust connection (water injected 90°, 45° elbows & riser)	
Propeller shaft couplings (rigid/flexible) — available standard sizes	

Dimensions

Inches
(Millimeters)

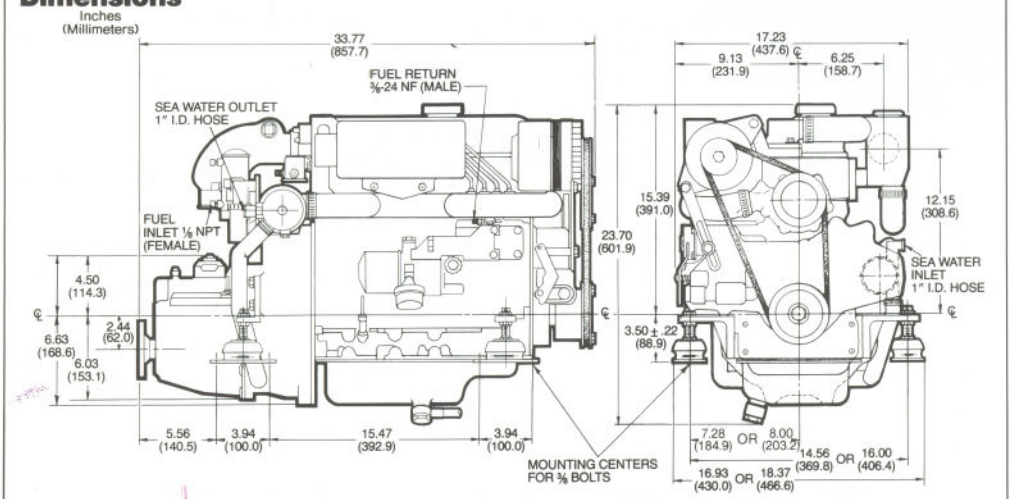

Authorized Dealer

WESTERBEKE CORP., AVON INDUSTRIAL PARK, AVON, MA 02322 U.S.A. • TELEPHONE: (508) 588-7700 • FAX: (508) 559-9323 • CABLE: WESTCORP
Specifications Subject to Change without Notice.
3M DPS 9/94

Four cylinder, four cycle smoothness in a lightweight, compact engine

Many features are standard equipment

The Westerbeke 55A Four is rated at 55 Horsepower (41 KW) at 3600 RPM. It is specifically designed for auxiliary sailboats ranging from 40-45 feet in length.

The Westerbeke 55A Four is a state of the art four cylinder, four cycle, naturally aspirated, 2.2 liter engine. An oversized transmission, self bleeding fuel system, 51 ampere battery charging alternator, domestic hot water heater connections, oil change hose and lube oil cooler in the fresh water circuit are just a few of the many desirable features that are standard on this engine. For installation, it is equipped with Westerbeke's new fail safe isolators which have been matched to the engine for optimum vibration control and noise reduction. The mounts are adjustable and have a slotted mounting base for easy alignment of the engine to the propeller shaft.

Many optional accessories are available including large single and dual output battery charging alternators and refrigeration compressor mounts. Factory engineered and factory installed, an owner or builder benefits from these complete and properly designed systems.

The Westerbeke 55A Four is extremely compact with dimensions of 35.0 inches long, 21.5 inches wide and an overall height of 26.8 inches. The total weight of the unit is only 470 pounds, a low 8.5 pounds per horsepower.

World-class products, world-wide service, Westerbeke engines and generators can be serviced by over 600 authorized dealers strategically located on major navigable waterways throughout the United States as well as in 37 countries around the world.

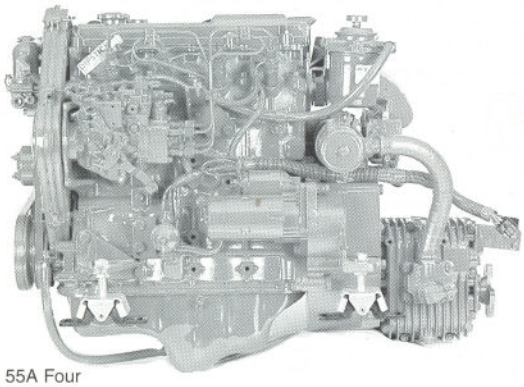

55A Four
Diesel Engine

Dimensions

Length	35.0" (889.0 mm)
Width	21.5" (645.2 mm)
Height	26.8" (680.2 mm)
Weight	470 lbs. (213.2 kilos)

See other side for more dimension information

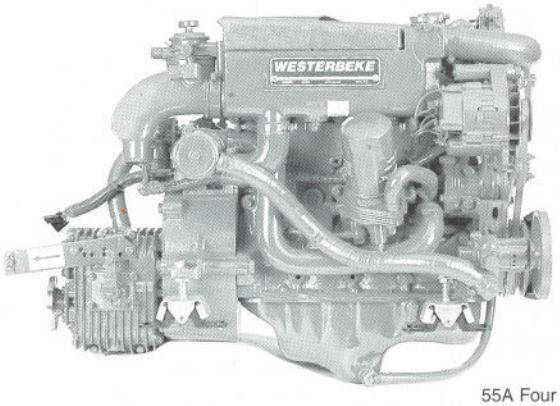

55A Four
Diesel Engine

A new generation of marine diesel engines

- Fresh water cooling
- Engine prewired to plug-in connector
- Self-bleeding fuel system
- 12 volt, 51 ampere alternator
- Domestic hot water connection
- Coolant recovery tank
- Throttle and shift control brackets
- Low oil pressure and high water temperature alarms
- Belt-driven sea water pump
- Oversized marine transmission with 1.88:1 reduction
- Transmission oil cooler
- Glow plug cold starting aid
- Engine matched four point adjustable mounts
- Lube oil drain hose
- Fresh water lube oil cooler
- Circuit breaker protected electrical system
- Operator's Manual and Parts List
- Large list of factory engineered options

05 EKIM 1995

WESTERBEKE
Engines & Generators

ENGINE WESTERBEKE 55A FOUR

Four cylinder, four cycle smoothness in a lightweight, compact engine

Many features are standard equipment

The new Model 63B Four represents the latest engine design from Westerbeke. With a low and narrow profile it is lightweight and easily installed. The naturally aspirated design provides extra low-end power as well as simplicity and reliability. The standard transmission, fresh water cooling system and captive fail-safe mounts are all oversized for added dependability.

Engineered with a self bleeding fuel system, front mounted sea water pump, oil drain hose and true one-side servicing, the product is easily maintained. A comprehensive list of factory designed and installed options allows you to custom tailor your engine to fit your individual requirements.

Parts and service are available worldwide. Westerbeke engines and generators can be serviced by over 600 authorized dealers strategically located in major navigable waterways in the United States and Canada, as well as in 22 countries overseas.

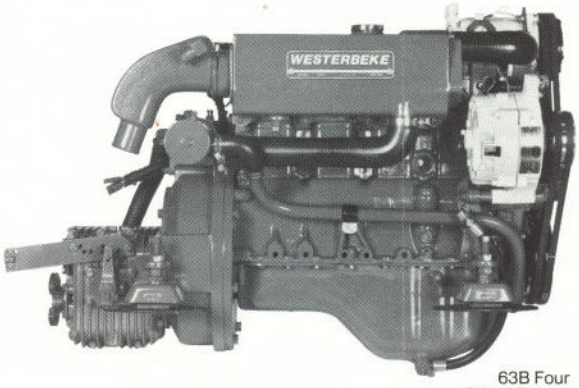

63B Four
Diesel Engine

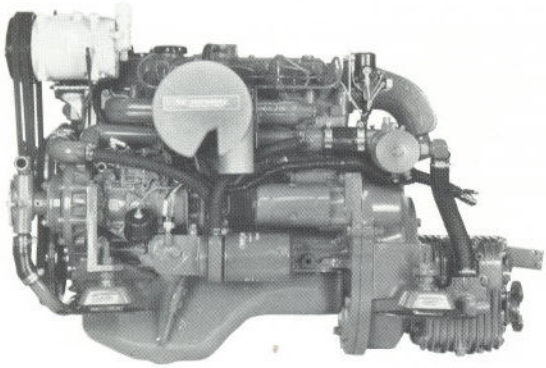

63B Four
Diesel Engine

A new generation of marine diesel engines

- Fresh water cooling
- Engine prewired to plug-in connector
- Self-bleeding fuel system
- 12 volt, 51 ampere alternator
- Domestic hot water connection
- Coolant recovery tank
- Throttle and shift control brackets
- Low oil pressure and high water temperature alarms
- Gear-driven sea water pump
- Oversized marine transmission with 2.7:1 reduction
- Transmission oil cooler
- Glow plug cold starting aid
- Oversized four point adjustable flex mount
- Lube oil drain hose
- Fresh water lube oil cooler
- Flexible fuel supply and return connector
- Operator's Manual and Parts List
- Large list of factory engineered options

Dimensions

Length	38.75″ (984.3 mm)
Width	21.19″ (538.2 mm)
Height	25.3″ (642.6 mm)
Weight	611 lbs (277.3 kilos)

See other side for more dimensional information

05 EKIM 1995

WESTERBEKE
Marine Products

DIESEL ENGINE WESTERBEKE 63B FOUR

Performance Data

Horsepower and rpm
63 hp @ 3600 rpm

Maximum torque and rpm
93 lbs/ft @ 2900 rpm

Typical fuel consumption is:
1.2 US/GPH (4.5 liters/hr) at 2500 rpm with recommended propeller

Propeller recommendation:
When underway and at full throttle, the propeller selection should allow the engine to turn 3500 rpm minimum.

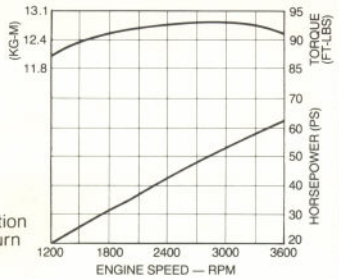

Construction — Engine Components

Cylinder head	Cast iron
Cylinder block	Cast iron
Crankshaft	Forged crankshaft, five main bearings
Valves	Overhead valves, rotating type
Fuel system	Self bleeding
Intake system	Tuned intake silencer for maximum noise reduction
Cooling system	Fresh water-cooled with oversized tube and shell type heat exchanger
Exhaust manifold	Cast aluminum, fresh water-cooled with built-in expansion tank

Specifications

Number of cylinders	4 Cylinder vertical in-line
Cycles	4 Cycle
Displacement	134.8 cu. in. (2.21 liter)
Bore and stroke	3.50" x 3.51" (88.9 mm x 89.1 mm)
Compression ratio	21:1
Maximum angle of installation	Not to exceed 14°
Maximum angle of operation	Not to exceed 25°
Crankshaft, direction of rotation	Counterclockwise as viewed from flywheel end
Propeller shaft, direction of rotation	Right hand — std. trans.
Dry weight	611 lbs (277.3 kilos)
Combustion system	Swirl type
Aspiration	Naturally aspirated
Lubrication system	Forced lubrication by gear pump
Cooling system	10.5 quarts (9.9 liters)
Starting aid	12 volt sheathed type glow plug
Engine stop	Electric plus manual lever
Fuel injection pump	Bosch type
Governor	Centrifugal type
Injectors	Throttle type
Fuel filter	Full flow, spin-on element
Lube oil filter	Full flow, spin-on element
Lubricant capacity	1.33 US gal (5.03 liters)
Lube oil cooler	Fresh water cooled
Fuel transfer pump	Electrical
Fuel supply and return piping	1/4" ID (.635 mm) minimum 3/8" ID (.952 mm) maximum
Starting motor	12 volt, solenoid, actuated shift
Battery charging alternator	51 ampere (12 volts)
Cold cranking amps	205 amps
Electrical system	12 volts DC, negative ground

Standard Equipment

Standard gear ratio	2.7:1
Mounting centers	18"
Flexible mounts	Oversized adjustable fail safe rubber type
Domestic hot water connection	
Coolant recovery tank	
Battery charging alternator	51 amp, 12 volt
Starting aide	
Control brackets	Throttle and shift
Prewired Engine	
Gear-driven sea water pump	
Lube oil cooler in fresh water system	
Lube oil drain hose	
Transmission oil cooler	
Oil fill	Top
Flexible fuel supply and return connection	
Operator's Manual and Parts List	

Optional Equipment

Captain panel with alarm (tachometer with lights)	
Admiral panel with alarms (tachometer with gauges)	
Dual station senders	
Other gear ratios	Consult local Distributor
Hydraulic transmissions	Consult local Distributor
Remote expansion tank	
Provisions for refrigeration compressor	
Muffler and fittings	
"A" and "B" on board spare parts kits	
Alternators, 90 amp single output; 135, 165, 190 dual output	
Anti-siphon valve for overboard cooling discharge water	
Technical Manual	
Exhaust connection (water injected 70° elbow)	
Propeller shaft couplings (rigid/flexible) — available standard sizes	

Dimensions

Inches
(Millimeters)

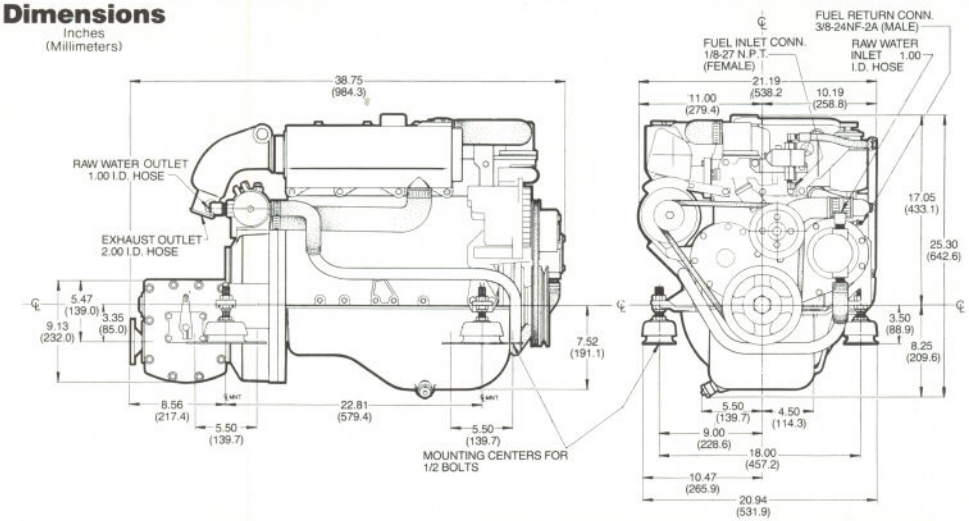

Authorized Dealer

Four cylinder, four cycle smoothness in a lightweight, compact engine

Many features are standard equipment

The new Model 63C Four represents the latest engine design from Westerbeke. With a low and narrow profile it is lightweight and easily installed. The naturally aspirated design provides extra low-end power as well as simplicity and reliability. The standard transmission, fresh water cooling system and captive fail-safe mounts are all oversized for added dependability.

Engineered with a self bleeding fuel system, front mounted sea water pump, oil drain hose and true one-side servicing, the product is easily maintained. A comprehensive list of factory designed and installed options allows you to custom tailor your engine to fit your individual requirements.

Parts and service are available worldwide. Westerbeke engines and generators can be serviced by over 600 authorized dealers strategically located in major navigable waterways in the United States and Canada, as well as in 37 countries overseas.

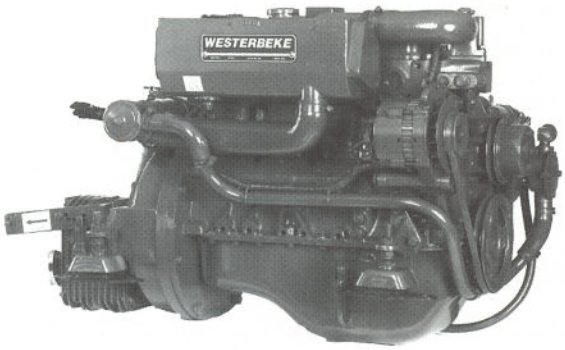

63C Four
Diesel Engine

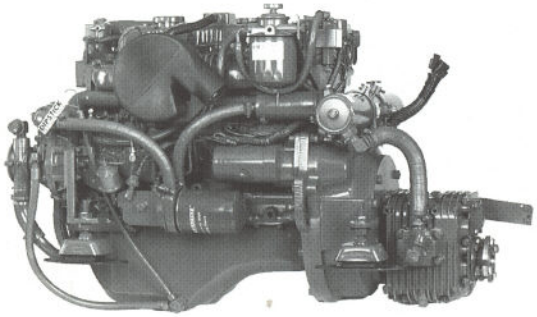

63C Four
Diesel Engine

A new generation of marine diesel engines

- Fresh water cooling
- Engine prewired to plug-in connector
- Self-bleeding fuel system
- 12 volt, 51 ampere alternator
- Domestic hot water connection
- Coolant recovery tank
- Throttle and shift control brackets
- Low oil pressure and high water temperature alarms
- Gear-driven sea water pump
- Oversized marine transmission with 2.7:1 reduction
- Transmission oil cooler
- Glow plug cold starting aid
- Engine matched four point adjustable mounts
- Lube oil drain hose
- Fresh water lube oil cooler
- Circuit breaker protected electrical system
- Operator's Manual and Parts List
- Large list of factory engineered options

Dimensions

Length	38.75" (984.3 mm)
Width	22.63" (574.6 mm)
Height	24.93" (633.2 mm)
Weight	614 lbs.(278.7 kilos)

See other side for more dimension information

05 EKIM 1995

WESTERBEKE
Engines & Generators

DIESEL ENGINE WESTERBEKE 63C FOUR

Performance Data

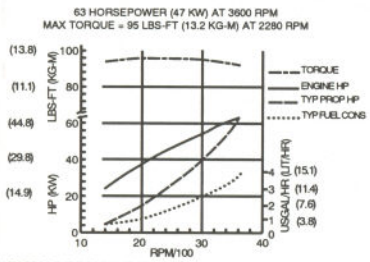

WESTERBEKE RECOMMENDS A PROPELLER THAT WILL ALLOW THE ENGINE TO TURN 3500-3600 RPM UNDERWAY AT FULL THROTTLE

Specifications

Number of cylinders	4 Cylinder vertical in-line
Cycles	4 Cycle
Displacement	134.8 cu. in. (2.21 liter)
Bore and stroke	3.50" x 3.51" (88.9 mm x 89.1 mm)
Compression ratio	21:1
Maximum angle of installation	Not to exceed 14°
Maximum angle of operation	Not to exceed 25°
Crankshaft, direction of rotation	Counterclockwise as viewed from flywheel end
Propeller shaft, direction of rotation	Right hand — std. trans.
Dry weight	614 lbs (278.7 kilos)
Combustion system	Swirl type
Aspiration	Naturally aspirated
Lubrication system	Forced lubrication by gear pump
Cooling system	10.5 quarts (9.9 liters)
Starting aid	12 volt sheathed type glow plug
Engine stop	Electric plus manual lever
Fuel injection pump	Bosch type
Governor	Centrifugal type
Injectors	Throttle type
Fuel filter	Full flow, spin-on element
Lube oil filter	Full flow, spin-on element
Lubricant capacity	1.33 US gal (5.03 liters)
Lube oil cooler	Fresh water cooled
Fuel transfer pump	Electrical
Fuel supply and return piping	1/4" ID (.635 mm) minimum 3/8" ID (.952 mm) maximum
Starting motor	12 volt, solenoid, actuated shift
Battery charging alternator	51 ampere (12 volts)
Cold cranking amps	205 amps
Electrical system	12 volts DC, negative ground

Construction — Engine Components

Cylinder head	Cast iron
Cylinder block	Cast iron
Crankshaft	Forged crankshaft, five main bearings
Valves	Overhead valves, rotating type
Fuel system	Self bleeding
Intake system	Tuned intake silencer for maximum noise reduction
Cooling system	Fresh water-cooled with oversized tube and shell type heat exchanger
Exhaust manifold	Cast aluminum, fresh water-cooled with built-in expansion tank

Standard Equipment

Standard gear ratio	2.7:1
Mounting centers	18"
Flexible mounts	Engine matched adjustable fail-safe neoprene type
Domestic hot water connection	
Coolant recovery tank	
Battery charging alternator	51 amp, 12 volt
Starting aide	
Control brackets	Throttle and shift
Prewired Engine	
Gear-driven sea water pump	
Lube oil cooler in fresh water system	
Lube oil drain hose	
Transmission oil cooler	
Oil fill	Top
Circuit breaker protected electrical system	
Operator's Manual and Parts List	

Optional Equipment

Captain panel with alarm (tachometer with lights)	
Admiral panel with alarms (tachometer with gauges)	
Dual station senders	
Other gear ratios	Consult local Distributor
Hydraulic transmissions	Consult local Distributor
Remote expansion tank	
Provisions for refrigeration compressor	
Muffler and fittings	
"A" and "B" on board spare parts kits	
Alternators, 90 amp single output; 135, 165, 190 dual output	
Anti-siphon valve for overboard cooling discharge water	
Technical Manual	
Exhaust connection (water injected 70° elbow)	
Propeller shaft couplings (rigid/flexible) — available standard sizes	

Dimensions

Inches
(Millimeters)

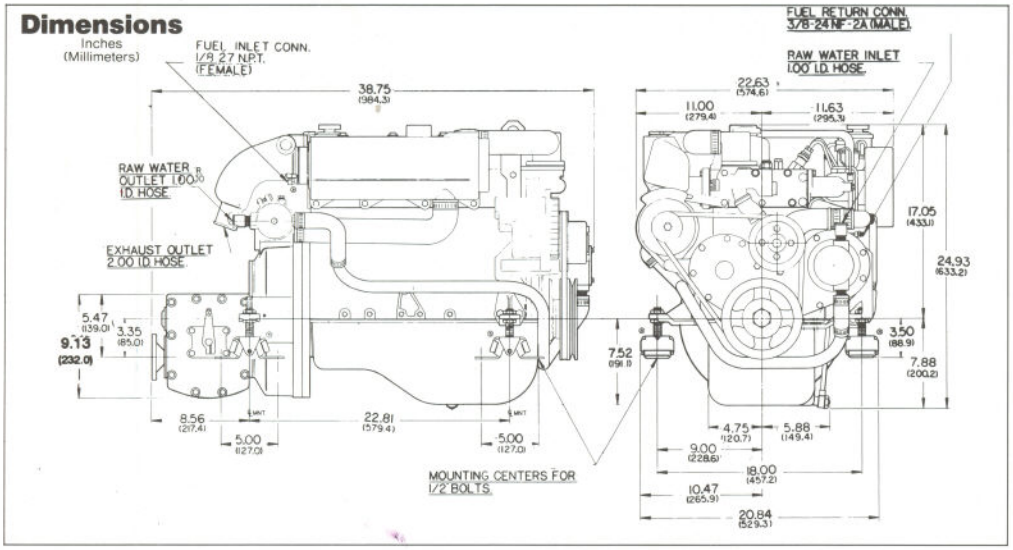

Authorized Dealer

Four cylinder, four cycle smoothness in a lightweight, compact engine

Many features are standard equipment

The new Model 71B Four represents the latest engine design from Westerbeke. With a low and narrow profile it is lightweight and easily installed. The naturally aspirated design provides extra low-end power as well as simplicity and reliability. The standard transmission, fresh water cooling system and captive fail-safe mounts are all oversized for added dependability.

Engineered with a self bleeding fuel system, front mounted sea water pump, oil drain hose and one-side servicing, the product is easily maintained. A comprehensive list of factory designed and installed options allows you to custom tailor your engine to fit your individual requirements.

Parts and service are available worldwide. Westerbeke engines and generators can be serviced by over 600 authorized dealers strategically located in major navigable waterways in the United States and Canada, as well as in 22 countries overseas.

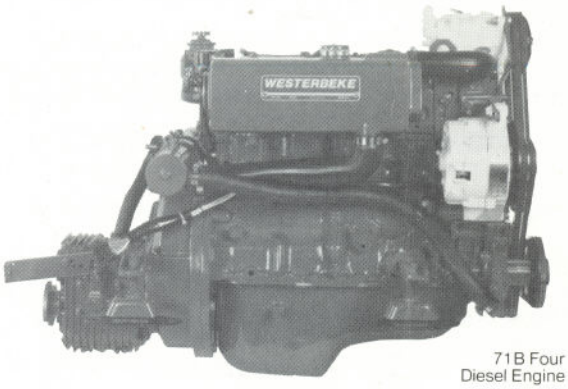

71B Four
Diesel Engine

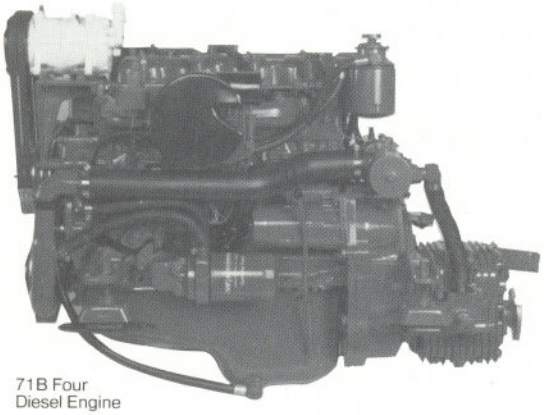

71B Four
Diesel Engine

A new generation of marine diesel engines

- Fresh water cooling
- Engine prewired to plug-in connector
- Self-bleeding fuel system
- 12 volt, 51 ampere alternator
- Domestic hot water connection
- Coolant recovery tank
- Throttle and shift control brackets
- Low oil pressure and high water temperature alarms
- Belt-driven sea water pump
- Oversized marine transmission with 2.7:1 reduction
- Transmission oil cooler
- Glow plug cold starting aid
- Oversized four point adjustable flex mount
- Lube oil drain hose
- Fresh water lube oil cooler
- Flexible fuel supply and return connector
- Operator's Manual and Parts List
- Large list of factory engineered options

Dimensions

Length	39.5″ (1003.3 mm)
Width	22.2″ (563.6 mm)
Height	26.9″ (684.2 mm)
Weight	652 lbs (295.9 kilos)

See other side for more dimension information

05 EKIM 1995

WESTERBEKE
Marine Products

DIESEL ENGINE WESTERBEKE 71B FOUR

WESTERBEKE
Diesel Engine

Performance Data

Horsepower and rpm
71 hp @ 3600 rpm

Maximum torque and rpm
118 lbs/ft @ 2200 rpm

Typical fuel consumption is:
1.4 US/GPH (5.2 liters/hr) at 2500 rpm with recommended propeller

Propeller recommendation:
When underway and at full throttle, the propeller selection should allow the engine to turn 3500 rpm minimum.

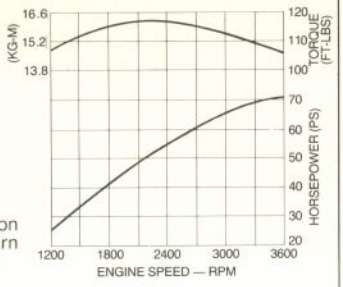

Specifications

Number of cylinders	4 Cylinder vertical in-line
Cycles	4 Cycle
Displacement	154.0 cu. in. (2.5 liter)
Bore and stroke	3.50" x 4.00" (88.9mm x 101.6mm)
Compression ratio	21:1
Maximum angle of installation	Not to exceed 14°
Maximum angle of operation	Not to exceed 25°
Crankshaft, direction of rotation	Counterclockwise as viewed from flywheel end
Propeller shaft, direction of rotation	Right hand — std. trans.
Dry weight	652 lbs (295.9 kilos)
Combustion system	Swirl type
Aspiration	Naturally aspirated
Lubrication system	Forced lubrication by gear pump
Cooling system	11.5 quarts (10.9 liters)
Starting aid	12 volt sheathed type glow plug
Engine stop	Electric
Fuel injection pump	Bosch type
Governor	Centrifugal type
Injectors	Throttle type
Fuel filter	Full flow, spin-on element
Lube oil filter	Full flow, spin-on element
Lubricant capacity	1.5 US gal (5.7 liters)
Lube oil cooler	Fresh water cooled
Fuel transfer pump	Electrical
Fuel supply and return piping	1/4" ID (.635 mm) minimum 3/8" ID (.952 mm) maximum
Starting motor	12 volt, solenoid, actuated shift
Battery charging alternator	51 ampere (12 volts)
Cold cranking amps	250-300 amps
Electrical system	12 volts DC, negative ground

Construction — Engine Components

Cylinder head	Cast iron
Cylinder block	Cast iron
Crankshaft	Forged crankshaft, five main bearings
Valves	Overhead valves, rotating type
Fuel system	Self bleeding
Intake system	Tuned intake silencer for maximum noise reduction
Cooling system	Fresh water-cooled with oversized tube and shell type heat exchanger
Exhaust manifold	Cast aluminum, fresh water-cooled with built-in expansion tank

Standard Equipment

Standard gear ratio	2.7:1
Mounting centers	18", 20" & 22.5"
Flexible mounts	Oversized adjustable fail safe rubber type
Domestic hot water connection	
Coolant recovery tank	
Battery charging alternator	51 amp, 12 volt
Starting aide	
Control brackets	Throttle and shift
Prewired Engine	
Belt-driven sea water pump	
Lube oil cooler in fresh water system	
Lube oil drain hose	
Transmission oil cooler	
Oil fill	Top
Flexible fuel supply and return connection	
Operator's Manual and Parts List	

Optional Equipment

Captain panel with alarm (tachometer with lights)	
Admiral panel with alarms (tachometer with gauges)	
Dual station senders	
Other gear ratios	Consult local Distributor
Hydraulic transmissions	Consult local Distributor
Remote expansion tank	
Provisions for refrigeration compressor	
Muffler and fittings	
"A" and "B" on board spare parts kits	
Alternators, 90 amp single output; 135, 165, 190 dual output	
Anti-siphon valve for overboard cooling discharge water	
Technical Manual	
Exhaust connection (water injected 70° elbow)	
Propeller shaft couplings (rigid/flexible) — available standard sizes	

Dimensions

Inches
(Millimeters)

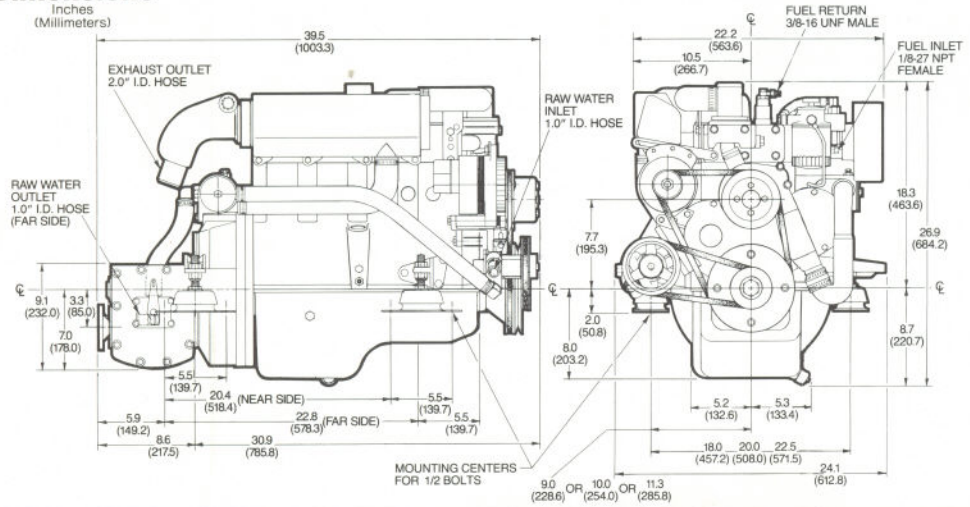

Authorized Dealer

WESTERBEKE CORP., AVON INDUSTRIAL PARK, AVON, MA 02322 U.S.A. • TELEPHONE: (508) 588-7700 • TELEX: 92-4444 • FAX: (508) 559-9323 • CABLE: WESTCORP

2M DPS 9/91

Four cylinder, four cycle smoothness in a lightweight, compact engine

Many features are standard equipment

The new Model 71C Four represents the latest engine design from Westerbeke. With a low and narrow profile it is lightweight and easily installed. The naturally aspirated design provides extra low-end power as well as simplicity and reliability. The standard transmission, fresh water cooling system and captive fail-safe mounts are all oversized for added dependability.

Engineered with a self bleeding fuel system, front mounted sea water pump, oil drain hose and true one-side servicing, the product is easily maintained. A comprehensive list of factory designed and installed options allows you to custom tailor your engine to fit your individual requirements.

Parts and service are available worldwide. Westerbeke engines and generators can be serviced by over 600 authorized dealers strategically located in major navigable waterways in the United States and Canada, as well as in 37 countries overseas.

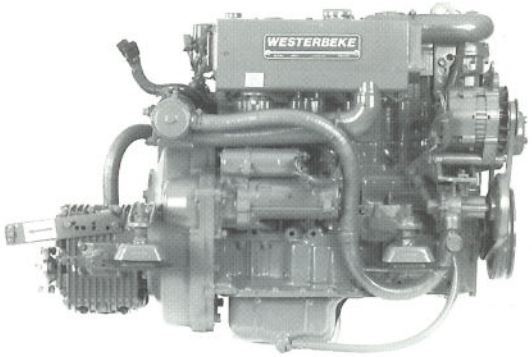

71C Four
Diesel Engine

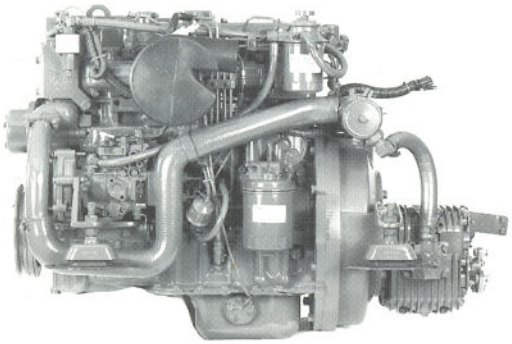

71C Four
Diesel Engine

A new generation of marine diesel engines

- Fresh water cooling
- Engine prewired to plug-in connector
- Self-bleeding fuel system
- 12 volt, 51 ampere alternator
- Domestic hot water connection
- Coolant recovery tank
- Throttle and shift control brackets
- Low oil pressure and high water temperature alarms
- Belt-driven sea water pump
- Oversized marine transmission with 2.7:1 reduction
- Transmission oil cooler
- Glow plug cold starting aid
- Engine matched four point adjustable mounts
- Lube oil drain hose
- Fresh water lube oil cooler
- Tuned air intake silencer
- Operator's Manual and Parts List
- Large list of factory engineered options

Dimensions

Length	39.3" (997.0 mm)
Width	25.3" (643.1 mm)
Height	27.3" (694.0 mm)
Weight	689 lbs. (312.6 kilos)

See other side for more dimension information

05 EKIM 1995

WESTERBEKE
Engines & Generators

ENGINE WESTERBEKE 71C FOUR

Performance Data

71 HORSEPOWER (52 KW) AT 3600 RPM
MAX TORQUE = 118 LBS-FT (16.4 KG-M) AT 1950 RPM

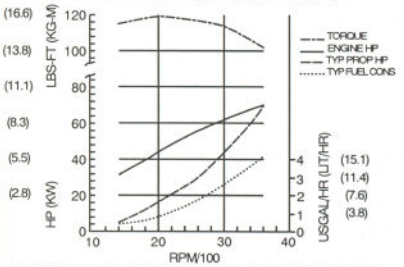

WESTERBEKE RECOMMENDS A PROPELLER THAT WILL ALLOW THE ENGINE TO TURN 3500-3600 RPM UNDERWAY AT FULL THROTTLE

Specification

Number of cylinders	4 Cylinder vertical in-line
Cycles	4 Cycle
Displacement	154.0 cu. in. (2.5 liter)
Bore and stroke	3.50" x 4.00" (88.9mm x 101.6 mm)
Compression ratio	21:1
Maximum angle of installation	Not to exceed 14°
Maximum angle of rotation	Not to exceed 25°
Crankshaft, direction of rotation	Counterclockwise as viewed from flywheel end
Propeller shaft, direction of rotation	Right hand – std. trans.
Dry weight	687 lbs (311.8 kilos)
Combustion system	Swirl type
Aspiration	Naturally aspirated
Lubrication system	Forced lubrication by gear pump
Cooling system	11.5 quarts (10.9 liters)
Starting aid	12 volt sheathed type glow plug
Engine stop	Electric
Fuel injection pump	Bosch type
Governor	Centrifugal type
Injectors	Throttle type
Fuel filter	Full flow, spin-on element
Lube oil filter	Full flow, spin-on element
Lubricant capacity	1.75 US gal (6.6 liters)
Lube oil cooler	Fresh water cooled
Fuel transfer pump	Electrical
Fuel supply and return piping	1/4" ID (.635 mm) minimum 3/8" ID (.925 mm) maximum
Starting motor	12 volt, solenoid, actuated shift
Battery charging alternator	51 ampere (12 volts)
Cold cranking amps	250-300 amps
Electrical system	12 volts DC, negative ground

Construction – Engine Components

Cylinder head	Cast Iron
Cylinder block	Cast Iron
Crankshaft	Forged crankshaft, five main bearings
Valves	Direct drive overhead cam
Fuel System	Self bleeding
Intake system	Intake silencer with air filters for maximum noise reduction
Cooling system	Fresh water-cooled with oversized tube and shell type heat exchanger
Exhaust manifold	Cast aluminum, fresh water-cooled with built -in expansion tank

Standard Equipment

Standard gear ratio	2.7:1
Mounting centers	22.5"
Flexible mounts	Engine matched adjustable fail safe neoprene type
Domestic hot water connection	
Coolant recovery tank	
Battery charging alternator	51 amp, 12 volt
Starting aide	
Control brackets	Throttle and shift
Prewired Engine	
Belt-driven sea water pump	
Lube oil cooler in fresh water system	
Lube oil drain hose	
Transmission oil cooler	
Oil fill	Top
Circuit breaker protected electrical system	
Operator's Manual and Parts List	

Optional Equipment

Captain panel with alarm (tachometer with lights)	
Admiral panel with alarms (tachometer with gauges)	
Dual station senders	
Other gear ratios	Consult local Distributor
Hydraulic transmissions	Consult local Distributor
Remote expansion tank	
Provision for refrigeration compressor	
Muffler and fittings	
"A" and "B" on board spare parts kits	
Alternator, 90 amp single output; 135, 165, 190 dual output	
Anti-siphon valve for overboard cooling discharge water	
Technical Manual	
Exhaust connection (water injected 70° elbow)	
Propeller shaft couplings (rigid/flexible) – available standard sizes	

Dimensions

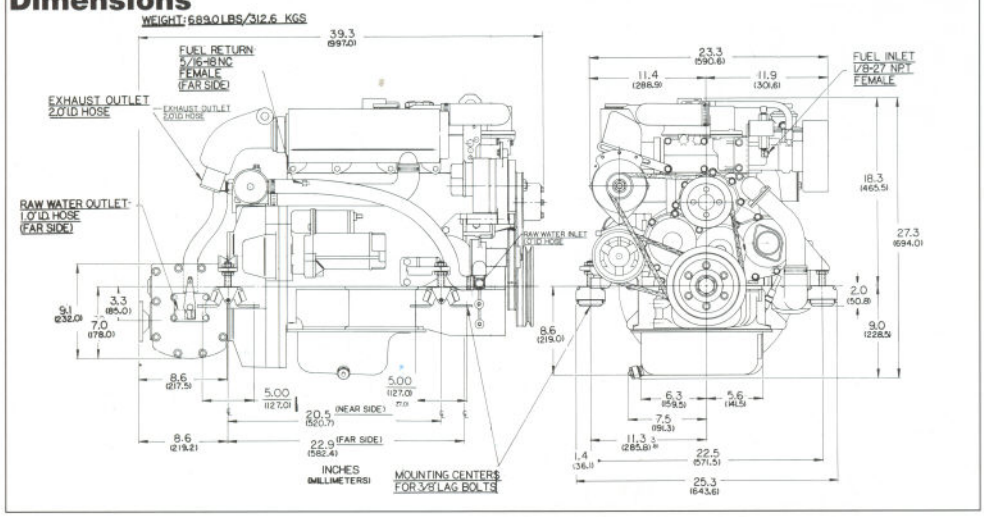

Authorized Dealer

Four cylinder, four cycle smoothness in a lightweight, compact engine

Many features are standard equipment

The new Model 82B Four represents the latest engine design from Westerbeke. With a low and narrow profile it is lightweight and easily installed. The naturally aspirated design provides extra low-end power as well as simplicity and reliability. The standard transmission, fresh water cooling system and captive fail-safe mounts are all oversized for added dependability.

Engineered with a self bleeding fuel system, front mounted sea water pump, oil drain hose and one-side servicing, the product is easily maintained. A comprehensive list of factory designed and installed options allows you to custom tailor your engine to fit your individual requirements.

Parts and service are available worldwide. Westerbeke engines and generators can be serviced by over 600 authorized dealers strategically located in major navigable waterways in the United States and Canada, as well as in 37 countries overseas.

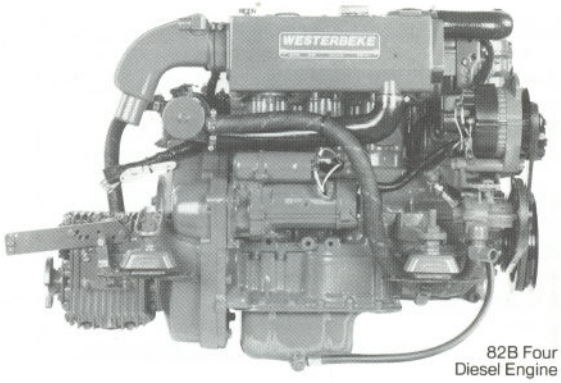

82B Four
Diesel Engine

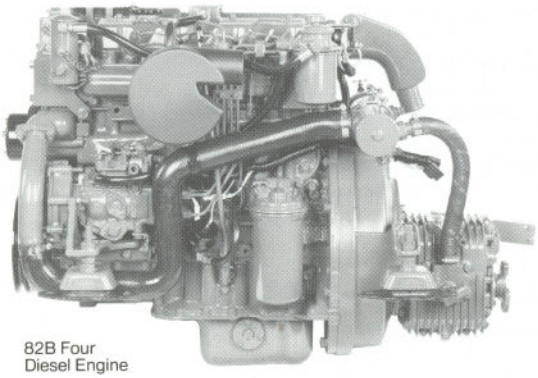

82B Four
Diesel Engine

A new generation of marine diesel engines

- Fresh water cooling
- Engine prewired to plug-in connector
- Self-bleeding fuel system
- 12 volt, 51 ampere alternator
- Domestic hot water connection
- Coolant recovery tank
- Throttle and shift control brackets
- Low oil pressure and high water termperature alarms
- Belt-driven sea water pump
- Standard marine transmission with 1.9:1 reduction
- Transmission oil cooler
- Glow plug cold starting aid
- Oversized four point adjustable flex mount
- Lube oil drain hose
- Fresh water lube oil cooler
- Tuned air intake silencer
- Operator's Manual and Parts List
- Large list of factory engineered options

Dimensions

Length	38.8″ (985.8 mm)
Width	25.5″ (647.7 mm)
Height	27.3″ (694.0 mm)
Weight	678 lbs (307.5 kilos)

See other side for more dimension information

05 EKIM 1995

WESTERBEKE
Engines & Generators

DIESEL ENGINE WESTERBEKE 82B FOUR

Performance Data

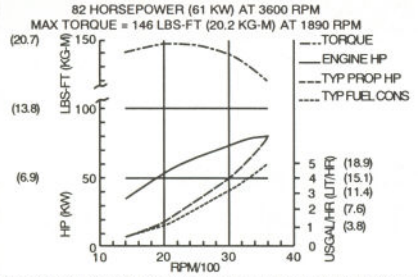

WESTERBEKE RECOMMENDS A PROPELLER THAT WILL ALLOW THE ENGINE TO TURN 3500-3600 RPM UNDERWAY AT FULL THROTTLE

Specifications

Number of cylinders	4 Cylinder vertical in-line
Cycles	4 Cycle
Displacement	182 cu. in. (2.977 liter)
Bore and stroke	3.74″ x 4.13″ (95 mm x 105 mm)
Compression ratio	21:1
Maximum angle of installation	Not to exceed 14°
Maximum angle of operation	Not to exceed 25°
Crankshaft, direction of rotation	Counterclockwise as viewed from flywheel end
Propeller shaft, direction of rotation	Right hand — std. trans.
Dry weight	678 lbs (307.5 kilos)
Combustion system	Swirl type
Aspiration	Naturally aspirated
Lubrication system	Forced lubrication by gear pump
Cooling system	13 quarts (12.3 liters)
Starting aid	12 volt sheathed type glow plug
Engine stop	Electric
Fuel injection pump	Bosch type
Governor	Centrifugal type
Injectors	Throttle type
Fuel filter	Full flow, spin-on element
Lube oil filter	Full flow, spin-on element
Lubricant capacity	6.5 quarts (6.2 liters)
Lube oil cooler	Fresh water cooled
Fuel transfer pump	Electrical
Fuel supply and return piping	1/4″ ID (.635 mm) minimum 3/8″ ID (.952 mm) maximum
Starting motor	12 volt, solenoid, actuated shift
Battery charging alternator	51 ampere (12 volts)
Cold cranking amps	250-300 amps
Electrical system	12 volts DC, negative ground

Construction — Engine Components

Cylinder head	Cast iron
Cylinder block	Cast iron
Crankshaft	Forged crankshaft, five main bearings
Valves	Overhead valves, rotating type
Fuel system	Self bleeding
Intake system	Tuned intake silencer for maximum noise reduction
Cooling system	Fresh water-cooled with oversized tube and shell type heat exchanger
Exhaust manifold	Cast aluminum, fresh water-cooled with built-in expansion tank

Standard Equipment

Standard gear ratio	1.9:1
Mounting centers	22.5″
Flexible mounts	Oversized adjustable fail-safe rubber type
Domestic hot water connection	
Coolant recovery tank	
Battery charging alternator	51 amp, 12 volt
Starting aide	
Control brackets	Throttle and shift
Prewired Engine	
Belt-driven sea water pump	
Lube oil cooler in fresh water system	
Lube oil drain hose	
Transmission oil cooler	
Oil fill	Top
Circuit breaker protected electrical system	
Operator's Manual and Parts List	

Optional Equipment

Captain panel with alarm (tachometer with lights)	
Admiral panel with alarms (tachometer with gauges)	
Dual station senders	
Other gear ratios	Consult local Distributor
Hydraulic transmissions	Consult local Distributor
Remote expansion tank	
Provisions for refrigeration compressor	
Muffler and fittings	
"A" and "B" on board spare parts kits	
Alternators, 90 amp single output; 135, 165, 190 dual output	
Anti-siphon valve for overboard cooling discharge water	
Technical Manual	
Exhaust connection (water injected 70° elbow)	
Propeller shaft couplings (rigid/flexible) — available standard sizes	

Dimensions

Inches
(Millimeters)

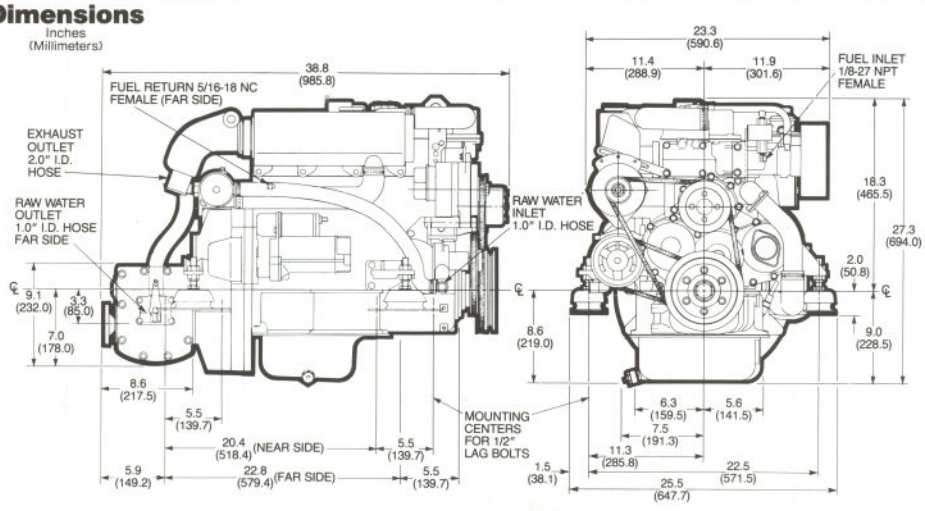

Authorized Dealer

WESTERBEKE CORP., AVON INDUSTRIAL PARK, AVON, MA 02322 U.S.A. • TELEPHONE: (508) 588-7700 • FAX: (508) 559-9323 • CABLE: WESTCORP

Specifications Subject to Change without Notice.

DPS 3M 4/95

Six cylinder, four cycle smoothness in a lightweight, compact engine

Many features are standard equipment

The new Model 108B Six represents the latest engine design from Westerbeke. With a low and narrow profile it is lightweight and easily installed. The naturally aspirated design provides extra low-end power as well as simplicity and reliability. The standard transmission, fresh water cooling system and captive fail-safe mounts are all oversized for added dependability.

Engineered with a self bleeding fuel system, front mounted sea water pump, oil drain hose and one-side servicing, the product is easily maintained. A comprehensive list of factory designed and installed options allows you to custom tailor your engine to fit your individual requirements.

Parts and service are available worldwide. Westerbeke engines and generators can be serviced by over 600 authorized dealers strategically located in major navigable waterways in the United States and Canada, as well as in 29 countries overseas.

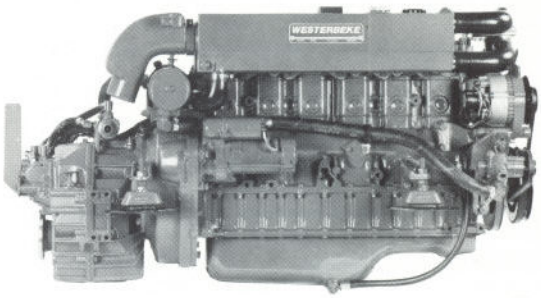

108B Six
Diesel Engine

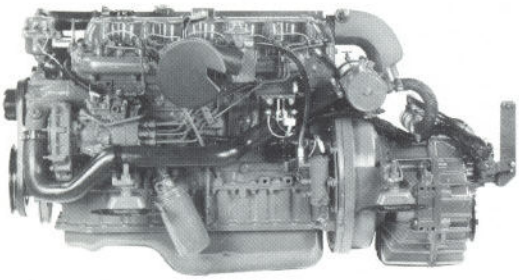

108B Six
Diesel Engine

A new generation of marine diesel engines

- Fresh water cooling
- Engine prewired to plug-in connector
- Self-bleeding fuel system
- 12 volt, 51 ampere alternator
- Domestic hot water connection
- Coolant recovery tank
- Throttle and shift control brackets
- Low oil pressure and high water termperature alarms
- Belt-driven sea water pump
- Oversized marine transmission with 2.0:1 reduction
- Transmission oil cooler
- Glow plug cold starting aid
- Oversized four point adjustable flex mount
- Lube oil drain hose
- Fresh water lube oil cooler
- Tuned air intake silencer
- Operator's Manual and Parts List
- Large list of factory engineered options

Dimensions

Length	53.3″ (1353.8 mm)
Width	26.9″ (682.6 mm)
Height	29.3″ (742.9 mm)
Weight	932 lbs (422.8 kilos)

See other side for more dimension information

05 EKIM 1995

WESTERBEKE
Marine Products

Performance Data

Horsepower and rpm
108 hp @ 3600 rpm

Maximum torque and rpm
188 lbs (26 kg)/ft @ 2000 rpm

Typical fuel consumption is:
2.1 US/GPH (7.9 liters/hr) at 2500 rpm with recommended propeller

Propeller recommendation:
When underway and at full throttle, the propeller selection should allow the engine to turn 3500 rpm minimum.

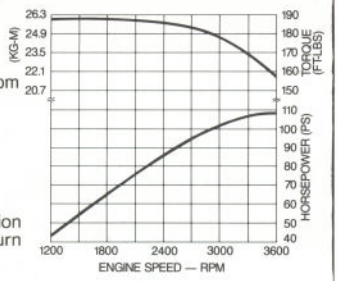

Specifications

Number of cylinders	6 Cylinder vertical in-line
Cycles	4 Cycle
Displacement	247.2 cu. in. (4.05 liter)
Bore and stroke	3.62" x 4.00" (91.9mm x 101.6mm)
Compression ratio	21:1
Maximum angle of installation	Not to exceed 14°
Maximum angle of operation	Not to exceed 25°
Crankshaft, direction of rotation	Counterclockwise as viewed from flywheel end
Propeller shaft, direction of rotation	Right hand — std. trans.
Dry weight	932 lbs (422.8 kilos)
Combustion system	Swirl type
Aspiration	Naturally aspirated
Lubrication system	Forced lubrication by gear pump
Cooling system	16 quarts (15.1 liters)
Starting aid	12 volt sheathed type glow plug
Engine stop	Electric
Fuel injection pump	Bosch type
Governor	Centrifugal type
Injectors	Throttle type
Fuel filter	Full flow, spin-on element
Lube oil filter	Full flow, spin-on element
Lubricant capacity	12 quarts (11.3 liters)
Lube oil cooler	Fresh water cooled
Fuel transfer pump	Electrical
Fuel supply and return piping	1/4" ID (.635 mm) minimum 3/8" ID (.952 mm) maximum
Starting motor	12 volt, solenoid, actuated shift
Battery charging alternator	51 ampere (12 volts)
Cold cranking amps	250-300 amps
Electrical system	12 volts DC, negative ground

Construction — Engine Components

Cylinder head	Cast iron
Cylinder block	Cast iron
Crankshaft	Forged crankshaft, seven main bearings
Valves	Overhead valves, rotating type
Fuel system	Self bleeding
Intake system	Tuned intake silencer for maximum noise reduction
Cooling system	Fresh water-cooled with oversized tube and shell type heat exchanger
Exhaust manifold	Cast aluminum, fresh water-cooled with built-in expansion tank

Standard Equipment

Standard gear ratio	2.0:1
Mounting centers	22.5"
Flexible mounts	Oversized adjustable fail-safe rubber type
Domestic hot water connection	
Coolant recovery tank	
Battery charging alternator	51 amp, 12 volt
Starting aide	
Control brackets	Throttle and shift
Prewired Engine	
Belt-driven sea water pump	
Lube oil cooler in fresh water system	
Lube oil drain hose	
Transmission oil cooler	
Oil fill	Top
Circuit breaker protected electrical system	
Operator's Manual and Parts List	

Optional Equipment

Captain panel with alarm (tachometer with lights)	
Admiral panel with alarms (tachometer with gauges)	
Dual station senders	
Other gear ratios	Consult local Distributor
Hydraulic transmissions	Consult local Distributor
Remote expansion tank	
Provisions for refrigeration compressor	
Muffler and fittings	
"A" and "B" on board spare parts kits	
Alternators, 90 amp single output; 135, 165, 190 dual output	
Anti-siphon valve for overboard cooling discharge water	
Technical Manual	
Exhaust connection (water injected 70° elbow)	
Propeller shaft couplings (rigid/flexible) — available standard sizes	

Dimensions

Inches
(Millimeters)

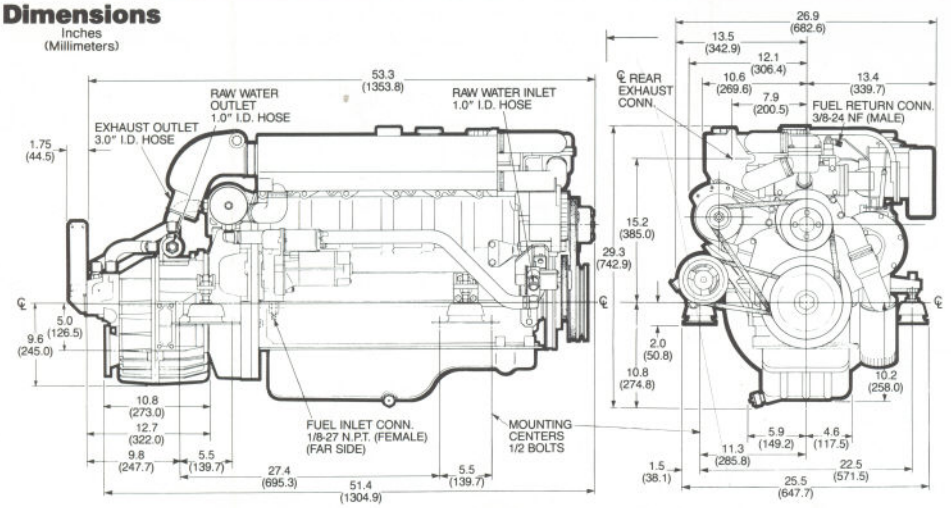

Authorized Dealer

WESTERBEKE CORP., AVON INDUSTRIAL PARK, AVON, MA 02322 U.S.A. • TELEPHONE: (508) 588-7700 • FAX: (508) 559-9323 • CABLE: WESTCORP
Specifications Subject to Change without Notice.
DPS 3M 2/94

Six cylinder, four cycle smoothness in a lightweight, compact engine

Many features are standard equipment

The new Model 108C Six represents the latest engine design from Westerbeke. With a low and narrow profile it is lightweight and easily installed. The naturally aspirated design provides extra low-end power as well as simplicity and reliability. The standard transmission, fresh water cooling system and captive fail-safe mounts are all oversized for added dependability.

Engineered with a self bleeding fuel system, front mounted sea water pump, oil drain hose and true one-side servicing, the product is easily maintained. A comprehensive list of factory designed and installed options allows you to custom tailor your engine to fit your individual requirements.

Parts and service are available worldwide. Westerbeke engines and generators can be serviced by over 600 authorized dealers strategically located in major navigable waterways in the United States and Canada, as well as in 37 countries overseas.

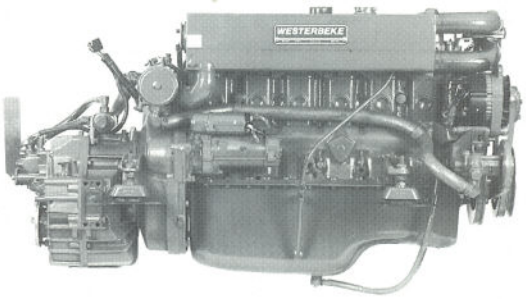

108C Six
Diesel Engine

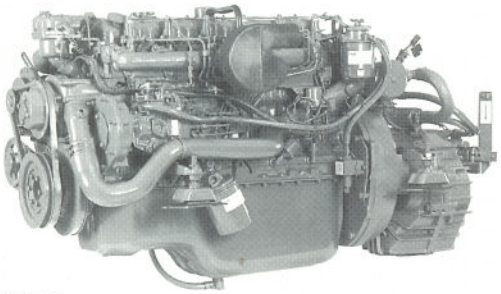

108C Six
Diesel Engine

A new generation of marine diesel engines

- Fresh water cooling
- Engine prewired to plug-in connector
- Self-bleeding fuel system
- 12 volt, 51 ampere alternator
- Domestic hot water connection
- Coolant recovery tank
- Throttle and shift control brackets
- Low oil pressure and high water temperature alarms
- Belt-driven sea water pump
- Oversized marine transmission with 2.0:1 reduction
- Transmission oil cooler
- Glow plug cold starting aid
- Oversized four point adjustable mounts
- Lube oil drain hose
- Fresh water lube oil cooler
- Flexible fuel supply and return connector
- Operator's Manual and Parts List
- Large list of factory engineered options

Dimensions

Length	55.1" (1398.3 mm)
Width	26.9" (682.6 mm)
Height	29.3" (742.9 mm)
Weight	972 lbs. (440.9 kilos)

See other side for more dimension information

05 EKIM 1995

DIESEL ENGINE WESTERBEKE 108C SIX

Performance Data

108 HORSEPOWER (80 KW) AT 3600 RPM
MAX TORQUE = 192 LBS-FT (26.6 KG-M) AT 1830 RPM

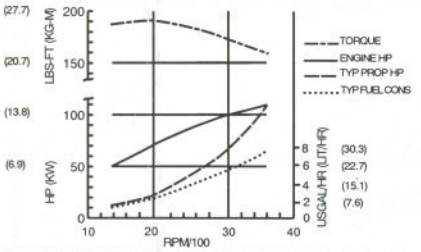

WESTERBEKE RECOMMENDS A PROPELLER THAT WILL ALLOW THE ENGINE TO TURN 3500-3600 RPM UNDERWAY AT FULL THROTTLE

Specification

Number of cylinders	6 Cylinder vertical in-line
Cycles	4 Cycle
Displacement	247.2 cu. in. (4.05 liter)
Bore and stroke	3.62" x 4.00" (91.9mm x 101.6mm)
Compression ratio	21:1
Maximum angle of installation	Not to exceed 14°
Maximum angle of rotation	Not to exceed 25°
Crankshaft, direction of rotation	Counterclockwise as viewed from flywheel end
Propeller shaft, direction of rotation	Right hand – std. trans.
Dry weight	972 (440.9 kilos)
Combustion system	Swirl type
Aspiration	Naturally aspirated
Lubrication system	Forced lubrication by gear pump
Cooling system	16 quarts (15.1 liters)
Starting aid	12 volt sheathed type glow plug
Engine stop	Electric
Fuel injection pump	Bosch type
Governor	Centrifugal type
Injectors	Throttle type
Fuel filter	Full flow, spin-on element
Lube oil filter	Full flow, spin-on element
Lubricant capacity	12 quarts (11.3 liters)
Lube oil cooler	Fresh water cooled
Fuel transfer pump	Electrical
Fuel supply and return piping	1/4" ID (.635 mm) minimum 3/8" ID (.925 mm) maximum
Starting motor	12 volt, solenoid, actuated shift
Battery charging alternator	51 ampere (12 volts)
Cold cranking amps	250-300 amps
Electrical system	12 volts DC, negative ground

Construction – Engine Components

Cylinder head	Cast Iron
Cylinder block	Cast Iron
Crankshaft	Forged crankshaft, five main bearings
Valves	Direct drive overhead cam
Fuel System	Self bleeding
Intake system	Intake silencer with air filters for maximum noise reduction
Cooling system	Fresh water-cooled with oversized tube and shell type heat exchanger
Exhaust manifold	Cast aluminum, fresh water-cooled with built -in expansion tank

Standard Equipment

Standard gear ratio	2.0:1
Mounting centers	22.5"
Flexible mounts	Engine matched adjustable fail safe neoprene type
Domestic hot water connection	
Coolant recovery tank	
Battery charging alternator	51 amp, 12 volt
Starting aide	
Control brackets	Throttle and shift
Prewired Engine	
Belt-driven sea water pump	
Lube oil cooler in fresh water system	
Lube oil drain hose	
Transmission oil cooler	
Oil fill	Top
Circuit breaker protected electrical system	
Operator's Manual and Parts List	

Optional Equipment

Captain panel with alarm (tachometer with lights)	
Admiral panel with alarms (tachometer with gauges)	
Dual station senders	
Other gear ratios	Consult local Distributor
Hydraulic transmissions	Consult local Distributor
Remote expansion tank	
Provision for refrigeration compressor	
Muffler and fittings	
"A" and "B" on board spare parts kits	
Alternator, 90 amp single output; 135, 165, 190 dual output	
Anti-siphon valve for overboard cooling discharge water	
Technical Manual	
Exhaust connection (water injected 70° elbow)	
Propeller shaft couplings (rigid/flexible) – available standard sizes	

Dimensions

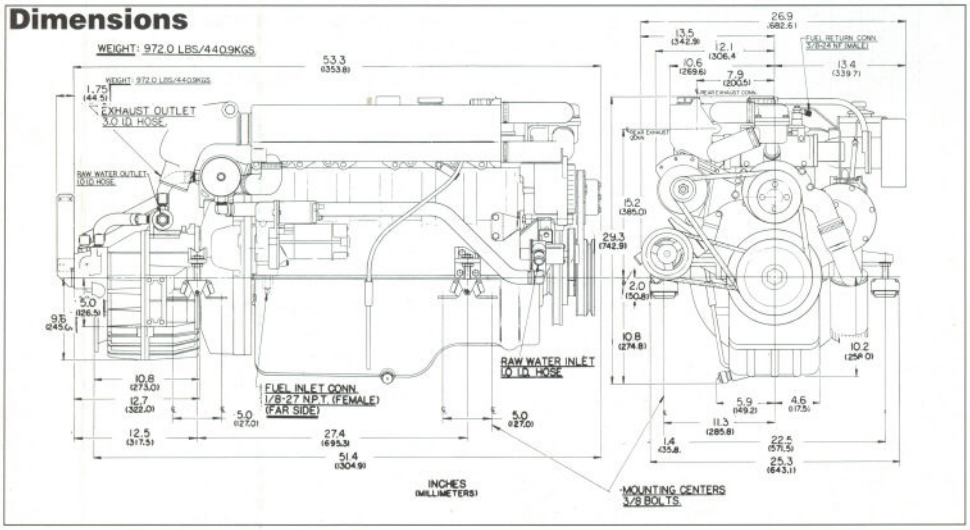

Authorized Dealer